Self Diagnosis Supported model

SERVICE MANUAL

AE-5 CHASSIS

MODEL	COMMANDER	DEST	CHASSIS NO.	MODEL	COMMANDER	DEST	CHASSIS NO.
KV-29FX60A	RM-891	Italian	SCC-Q12A-A	KV-29FX60E	RM-891	Spanish	SCC-Q14A-A
KV-29FX60B	RM-891	French	SCC-Q13A-A	KV-29FX60U	RM-891	UK	SCC-Q15A-A
KV-29FX60D	RM-891	AEP	SCC-Q11A-A				

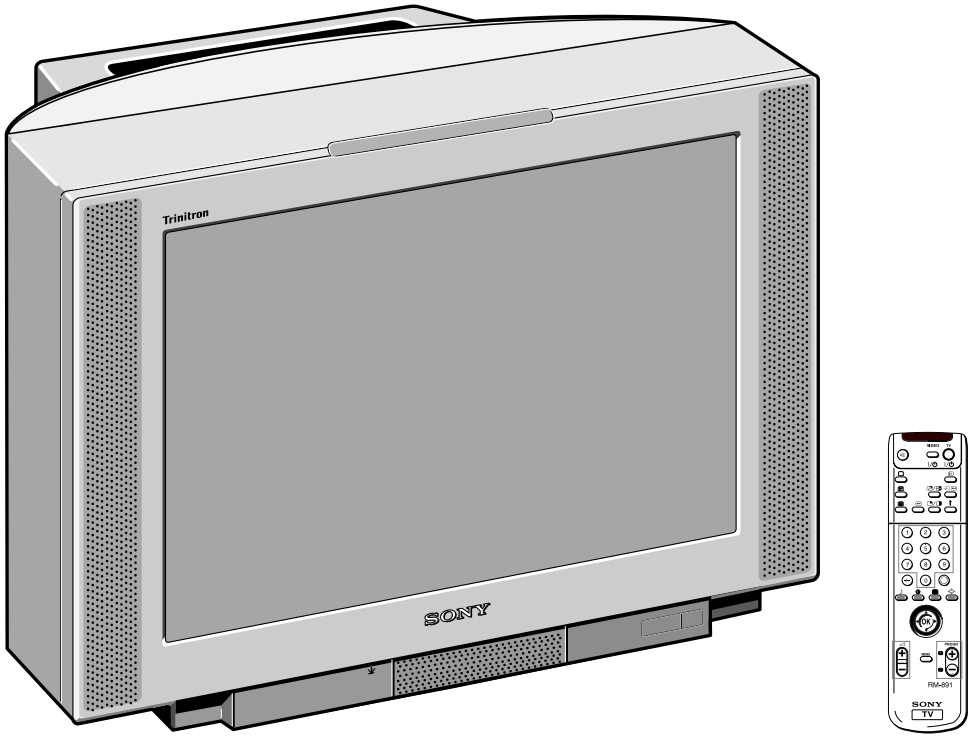

MICROFILM

TRINITRON ® COLOR TV

SONY ®

ITEM MODEL	Television System	Stereo System	Channel Coverage	Color System
Italian	B/G/H,D/K	GERMAN Stereo	ITALIA VHF : A-H2 (C) UHF : 21-69 PAL B/G/H VHF : E2-E12 UHF : E21-E69 CABLE TV (1) : S1-S41 CABLE TV (2) : S01-S05,M1-M10,U1-U10 DK VHF : R01-R12 UHF : R21-R69	PAL, SECAM NTSC4.43, NTSC3.58 (VIDEO IN)
French	B/G/H, D/K,L,I	GERMAN/NICAM Stereo	L VHF : F02-F10 UHF : F21-F60 CABLE : B-Q B/G/H VHF : E2-E12 UHF : E21-E69 CABLE TV (1) : S1-S41 CABLE TV (2) : S01-S05, M1-M10, U1-U10 ITALIA VHF : A-H2 (C) UHF : 21-69 I UHF : B21-B69	PAL, SECAM NTSC4.43, NTSC3.58 (VIDEO IN)
AEP	B/G/H, D/K	GERMAN Stereo	PAL B/G/H/ VHF : E2-E12 : E21-E69 CABLE TV (1) : S1-S41 CABLE TV (2) : S01-S05, M1-M10, U1-U10 ITALIA VHF : A-H2 (C) UHF : 21-69 D/K VHF : R01-R12 UHF : R21-R69	PAL, SECAM NTSC4.43, NTSC3.58 (VIDEO IN)
Spanish	B/G/H, D/K	GERMAN/NICAM Stereo	PAL B/G/H/ VHF : E2-E12 : E21-E69 CABLE TV (1) : S1-S41 CABLE TV (2) : S01-S05, M1-M10, U1-U10 ITALIA VHF : A-H2 (C) UHF : 21-69	PAL, SECAM NTSC4.43, NTSC3.58 (VIDEO IN)
UK	I	NICAM Stereo	UHF : B21-B69	PAL NTSC4.43, NTSC3.58 (VIDEO IN)

MODEL	29FX60A	29FX60B	29FX60D	29FX60E	29FX60U
Power Consumption	130W	130W	130W	130W	130W

[PICTURE TUBE] Super Trinitron
Approx. 72 cm (29 inches)
(Approx. 68 cm picture measured diagonally)
110 degree deflection

[FRONT]
Video output - phono jack
Audio inputs - phono jacks
S Video input - 4 pin din
Headphone jack : stereo minijack

Input/Output Terminals

[REAR]
21-pin Euro connector (CENELEC standard).
- Inputs for Audio and Video signals.
- Inputs for RGB.
- Outputs of TV Video and Audio signals.

21-pin Euro connector
- Inputs for Audio and Video signals.
- Inputs for S video.
- Outputs forVideo and Audio signals (selectable).

21-pin Euro connector
- Inputs for Audio and Video signals.
- Inputs for S video.

Phono Jack
- Outputs for Audio Signals

External speaker terminals : 2-pin Din

Sound output	2x25W (Music Power)
Subwoofer	25W (Music Power)
Power requirements	220 - 240V
Dimensions	Approx 738x588x507mm
Weight	Approx 52kg
Supplied accessories	RM-891 Remote Commander (1) IEC designated R6 battery (2)
Other features	NICAM*, FASTEXT, TOPTEXT

* (KV-29FX60B/29FX60E/29FX60U only)

[RM-891]

Remote control system	Infrared control
Power requirements	3V dc 2 batteries IEC designation R6 (size AA)
Dimensions	Approx 210x56x24mm (w/h/d)
Weight	Approx 110g (Not including battery)

Design and specifications are subject to change without notice.

Model Name / Item	KV-29FX60A	KV-29FX60B	KV-29FX60D	KV-29FX60E	KV-29FX60U
Pal Comb	OFF	OFF	OFF	OFF	OFF
PIP	ON	ON	ON	ON	ON
RGB Priority	ON	ON	ON	ON	ON
Woofer Box	ON	ON	ON	ON	ON
Scart 1	ON	ON	ON	ON	ON
Scart 2	ON	ON	ON	ON	ON
Front in (3)	ON	ON	ON	ON	ON
Scart 4	ON	ON	ON	ON	ON
Projector	OFF	OFF	OFF	OFF	OFF
AKB in 16:9 mode	ON	ON	ON	ON	ON
Norm B/G	ON	ON	ON	ON	OFF
Norm I	OFF	ON	OFF	OFF	ON
Norm D/K	ON	ON	ON	ON	OFF
Norm AUS	OFF	OFF	OFF	OFF	OFF
Norm L	OFF	ON	OFF	OFF	OFF
Norm SAT	OFF	OFF	OFF	OFF	OFF
Norm M	OFF	OFF	OFF	OFF	OFF
Teletext	ON	ON	ON	ON	ON
Nicam Stereo	OFF	ON	OFF	ON	ON
Language Preset	Italian	French	German	Spanish	English

WARNING (KV-29FX60U only)

The flexible mains lead is supplied connected to a **B.S. 1363** fused plug having a fuse of **5 AMP** capacity. Should the fuse need to be replaced, use a **5 AMP FUSE** approved by **ASTA** to **BS 1362**, ie one that carries the ASTA mark.
IF THE PLUG SUPPLIED WITH THIS APPLIANCE IS NOT SUITABLE FOR THE OUTLET SOCKETS IN YOUR HOME, IT SHOULD BE CUT OFF AND AN APPROPRIATE PLUG FITTED. THE PLUG SEVERED FROM THE MAINS LEAD MUST BE DESTROYED AS A PLUG WITH BARED WIRES IS DANGEROUS IF ENGAGED IN A LIVE OUTLET SOCKET.
When an alternative type of plug is used it should be fitted with a **5 AMP FUSE**, otherwise the circuit should be protected by a **5 AMP FUSE** at the distribution board.

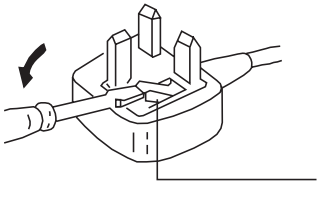

How to replace the fuse.
Open the fuse compartment with a screwdriver blade and replace the fuse.

21 pin connector

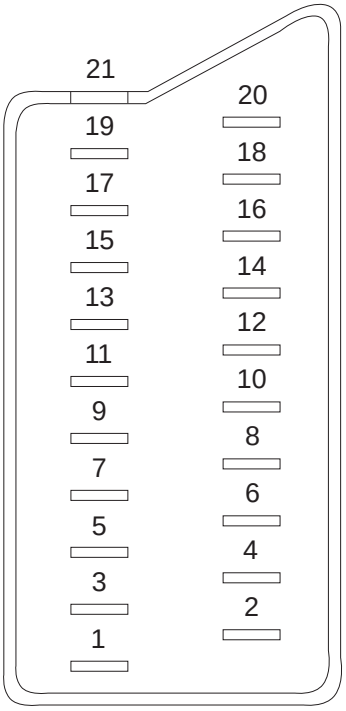

Pin No	1	2	4	Signal	Signal level
1	○	○	○	Audio output B (right)	Standard level : 0.5V rms Output impedence : Less than 1kohm*
2	○	○	○	Audio output B (right)	Standard level : 0.5V rms Output impedence : More than 10kohm*
3	○	○	○	Audio output A (left)	Standard level : 0.5V rms Output impedence : Less than 1kohm*
4	○	○	○	Ground (audio)	
5	○	○	○	Ground (blue)	
6	○	○	○	Audio input A (left)	Standard level : 0.5V rms Output impedence : More than 10kohm*
7	○	●	●	Blue input	0.7 +/- 3dB, 75 ohms positive
8	○	○	○	Function select (AV control)	High state (9.5-12V) : Part mode Low state (0-2V) : TV mode Input impedence : More than 10K ohms Input capacitance : Less than 2nF
9	○	○	○	Ground (green)	
10	○	○	○	Open	
11	○	●	●	Green	Green signal : 0.7 +/- 3dB, 75 ohms, positive
12	○	○	○	Open	
13	○	○	○	Ground (red)	
14	○	○	○	Ground (blanking)	
15	○	–	–	Red input	0.7 +/- 3dB, 75 ohms, positive
	–	○	○	(S signal Chroma input)	0.3 +/- 3dB, 75 ohms, positive
16	○	●	●	Blanking input (Ys signal)	High state (1-3V) Low state (0-0.4V) Input impedence : 75 ohms
17	○	○	○	Ground (video output)	
18	○	○	○	Ground (video input)	
19	○	○	○	Video output	1V +/- 3dB, 75ohms, positive sync 0.3V (-3+10dB)
20	○	–	–	Video input	1V +/- 3dB, 75ohms, positive sync 0.3V (-3+10dB)
	–	○	○	Video input Y (S signal)	1V +/- 3dB, 75ohms, positive sync 0.3V (-3+10dB)
21	○	○	○	Common ground (plug, shield)	

○ Connected ● Not Connected (open) * at 20Hz - 20kHz

Pin No.	Signal	Signal Level
1	Ground	
2	Ground	
3	Y (S signal) input	1V ± 3dB 75 ohm, positive Sync. 0.3V -3 + 10dB
4	C (S signal) input	0.3V ± 3dB 75 ohm, positive Sync.

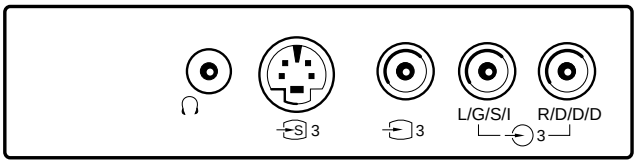

AE-5 SELF DIAGNOSTIC SOFTWARE

The identification of errors within the AE-5 chassis is triggered in one of two ways :- 1: Busy or 2: Device failure to respond to IIC. In the event of one of these situations arising the software will first try to release the bus if busy (Failure to do so will report with continuous flashing LED) and then communicate with each device in turn to establish if a device is faulty. If a device is found to be faulty the relevant device number will be displayed through the LED (Series of flashes which must be counted) See table 1., non fatal errors are reported using this method.

Diagnostic Item Description	No of times Standby LED Flashes	Probable cause Location	Detected Symptoms
Power does not turn on	Does not light	Power cord is not plugged in Fuse is burned out	Power does not come on No power is supplied to the TV AC power supply is faulty
+B Overcurrent (OCP)	2 times	H.OUT (Q6803/6804) is shorted. (D Board) Linearity FET (Q6806) is shorted. (D Board) IC6604 Power IC is shorted. (D Board)	Power does not come on Load on power line has shorted
Vertical Deflection stopped	4 times	+15V is not supplied R6835 open (D Board) -15V is not supplied R6834 open (D Board) IC6700 is shorted (D Board)	Vertical deflection pulse has stopped Power line has shorted

ERROR	LED ERROR COUNT
No error	00
Not allowed (may be confused with Sircs response flash!)	01
Over Current Protection	02
Over Voltage Protection	03
Vertical Protection	04
AKB	05
H - Protection	06
Speaker Protection	07
General IIC Line 0 error	08
MEGATEXT	09
NVM	10
Main colour decoder	11
Feature Box	12
D/A converter	13
Backend	14
Multi sound processor	15
Auto Wide	16
External RAM	17

Flash Timing Example : e.g. error number 3

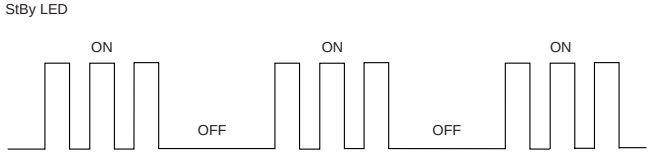

ERROR DETECTION MONITOR

Device acknowledge is used to check IIC errors. Device acknowledge is checked by sending an IIC start sequence during CRT power on. Each device is checked three times, if there is no acknowledge after every attempt, it will be regarded as an error.
There are three steps to check errors

1. IIC line 0
   If all devices except the NVM have errors, IIC line 0 error is displayed
2. Board check
   If all devices mounted on one board have errors, board error is displayed
3. Each device check
   If IIC line error and board error are not detected then the device with an error is displayed

The detected errors can be displayed as follows:

1. Error Monitor Menu
2. Error Reader

1. ERROR MONITOR MENU

The error monitor menu is displayed by selecting TT33. The following menu will be displayed:

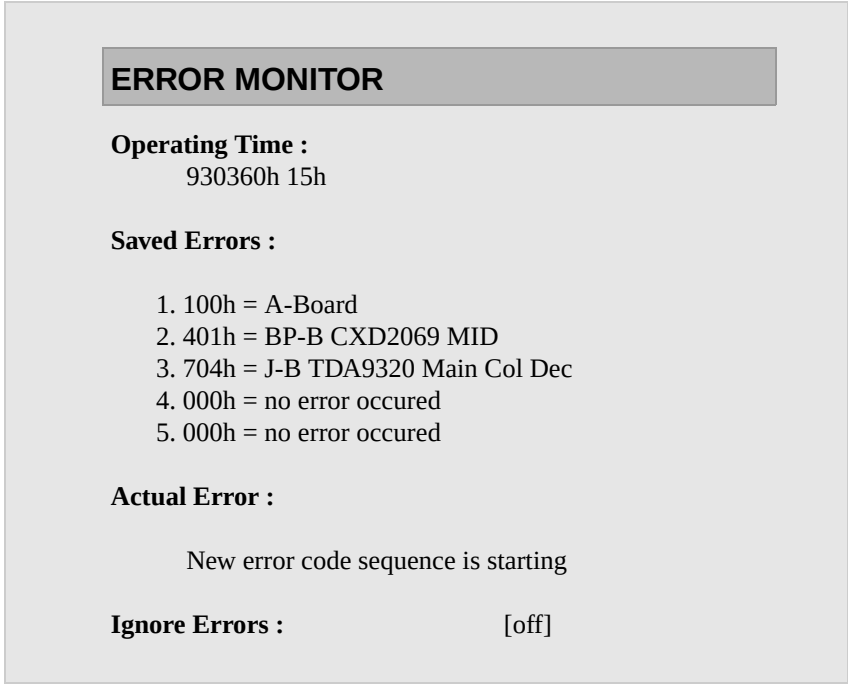

2. ERROR READER DISPLAY

The error reader display is connected to the service connector to read actual error codes. The part number for the error reader display is S-188-900-10. Once an error has been detected it will then be displayed on the two digit error reader. The errors displayed refer to the following table :

	Send Data to Error Reader			
Error Code	Data high	Data Low	Error type	Function
00 00h	-	f0h	no device	
Gen.IIC Error				
00 01h	f0h	01h	IIC 0 line	
00 02h	f0h	02h	IIC 1 line	not used
Board Error				
01 00h	f1h	00h	A Board	
02 00h	f2h	00h	B1 Board	
03 00h	f3h	00h	B2 Board	
04 00h	f4h	00h	BP Board	
05 00h	f5h	00h	D1 Board	
06 00h	f6h	00h	E Board	
07 00h	f7h	00h	J Board	
Device Error				
A Board				
01 01h	f1h	01h	CXA1875	Port Expander
01 02h	f1h	02h	TU1326	Main Tuner
01 03h	f1h	03h	TU1350	Sub Tuner
B1 Board				
02 01h	f2h	01h	P83C654	Feature Box
02 02h	f2h	02h	SDA9280	D/A Converter
B2 Board				
03 01h	f3h	01h	SAA4977	Basic
03 02h	f3h	02h	SAA4950	Memory
BP Board				
04 01h	f4h	01h	CXD2069	MID
D1 Board				
05 01h	f5h	01h	CXA8070	Dynamic Conv.
05 02h	f5h	02h	CXA1875	Port Expander
E Board				
06 01h	f6h	01h	CXD2100	Backend
J Board				
07 01h	f7h	01h	CXD2057	Auto Wide
07 02h	f7h	02h	SDA9288	PIP
07 03h	f7h	03h	TDA9320	Sub Colour
07 04h	f7h	04h	TDA9320	Main Colour
07 05h	f7h	05h	CXA1875	Sub Sound
07 06h	f7h	06h	TDA7309	HP Amp
07 07h	f7h	07h	TEA6422DT	Audio SW
07 08h	f7h	08h	MSP3410D	Sound Proc
07 09h	f7h	09h	TC9337F	Sound DSP

TABLE OF CONTENTS

Section	Title	Page
	Warning and Caution	3
	Self-Diagnostic Function	5
1. GENERAL		
	Overview	9
	First time operation	10
	Advanced Operations	11
	Teletext	16
2. DISASSEMBLY		
2-1.	Rear Cover Removal	17
2-2.	Chassis Assy Removal	17
2-3.	Service Position	17
2-4.	U Board Removal	17
2-5.	J Board Removal	18
2-6.	J Shield Romoval	18
2-7.	B2 Board Removal	18
2-8.	Picture Tube Removal	19
2-9.	Removal and Replacement of the Main-Bracket bottom plates	20
3. SET-UP ADJUSTMENTS		
3-1.	Beam Landing	21
3-2.	Convergence	22
3-3.	Focus	24
3-4.	Screen [G2] White Balance	24
4. CIRCUIT ADJUSTMENTS		
4-1.	Electrical Adjustments	26
4-2.	Volume Electrical Adjustments	31
4-3.	Test Mode 2	33
5. DIAGRAMS		
5-1.	Block Diagram (1)	35
	Block Diagram (2)	39
	Block Diagram (3)	43
	Block Diagram (4)	48
5-2.	Circuit Board Location	53
5-3.	Schematic Diagrams and Printed Wiring Boards	53
	* C Board	55
	* J Board	63
	* U Board	72
	* A Board	79
	* B2 Board	83
	* VM Board	88
	* D1 Board	93
	* M Board	97
	* E Board	101
	* D Board	109
	* F1 Board	113
	* F Board	114
	* H1 Board	115
5-4.	Semiconductors	117
5-5.	IC Blocks	120
6. EXPLODED VIEWS		
6-1.	Chassis	121
6-2.	Picture Tube	122
7. ELECTRICAL PARTS LIST		123

CAUTION

SHORT CIRCUIT THE ANODE OF THE PICTURE TUBE AND THE ANODE CAP TO THE METAL CHASSIS, CRT SHIELD, OR THE CARBON PAINTED ON THE CRT, AFTER REMOVAL OF THE ANODE CAP

WARNING !!

AN ISOLATING TRANSFORMER SHOULD BE USED DURING ANY SERVICE WORK TO AVOID POSSIBLE SHOCK HAZARD DUE TO LIVE CHASSIS. THE CHASSIS OF THIS RECEIVER IS DIRECTLY CONNECTED TO THE POWER LINE.

SAFETY-RELATED COMPONENT WARNING !!

COMPONENTS IDENTIFIED BY SHADING AND MARKED ⚠ ON THE SCHEMATIC DIAGRAMS, EXPLODED VIEWS AND IN THE PARTS LIST ARE CRITICAL FOR SAFE OPERATION. REPLACE THESE COMPONENTS WITH SONY PARTS WHOSE PART NUMBERS APPEAR AS SHOWN IN THIS MANUAL OR IN SUPPLEMENTS PUBLISHED BY SONY.

ATTENTION

APRES AVOIR DECONNECTE LE CAP DE'LANODE, COURT-CIRCUITER L'ANODE DU TUBE CATHODIQUE ET CELUI DE L'ANODE DU CAP AU CHASSIS METALLIQUE DE L'APPAREIL, OU AU COUCHE DE CARBONE PEINTE SUR LE TUBE CATHODIQUE OU AU BLINDAGE DU TUBE CATHODIQUE.

ATTENTION !!

AFIN D'EVITER TOUT RISQUE D'ELECTROCUTION PROVENANT D'UN CHÁSSIS SOUS TENTION, UN TRANSFORMATEUR D'ISOLEMENT DOIT ETRE UTILISÈ LORS DE TOUT DÈPANNAGE. LE CHÁSSIS DE CE RÈCEPTEUR EST DIRECTMENT RACCORDÈ Á L'ALIMENTATION SECTEUR.

ATTENTION AUX COMPOSANTS RELATIFS Á LA SÈCURITÈ !!

LES COMPOSANTS IDENTIFIÈS PAR UNE TRAME ET PAR UNE MARQUE ⚠ SUR LES SCHÈMAS DE PRINCIPE, LES VUES EXPLOSÈES ET LES LISTES DE PIECES SONT D'UNE IMPORTANCE CRITIQUE POUR LA SÈCURITÈ DU FONCTIONNEMENT, NE LES REMPLACER QUE PAR DES COMPSANTS SONY DONT LE NUMÈRO DE PIÈCE EST INDIQUÈ DANS LE PRÈSENT MANUEL OU DANS DES SUPPLÈMENTS PUBLIÈS PAR SONY.

SECTION 1
GENERAL

The operating instructions mentioned here are partial abstracts from the Operating Instruction Manual. The page numbers of the Operating Instruction Manual remain as in the manual.

Overview

This section briefly describes the buttons and controls on the TV set and the Remote Control.
Open the flaps at the front and back of his Instruction Manual for detailed illustrations.
For more information refer to the page numbers given in the overview.

Remote Control

Symbol	Description	See page
❶ TV I/⏻	TV: standby mode on/off	32
❷	TV: on-screen display	32
	Teletext: index page	42
❸	Selecting of input source	44
	Teletext: Freezing a subpage	42
❹	PIP: Swapping the screens	41
❺	PIP: Selecting the source	41
❻	PIP: Switching on and off	41
❼ 1, 2, ... 9, 0	Number buttons	32
❽	Back to the channel last selected	32
❾	Selecting of screen format	32
❿	No function on this set	
⓫	Joystick for menu selection	31
	Press OK to confirm	
⓬ MENU	Switching on and off of Menu system	31
⓭ PROGR +/–	TV: Channel selection up- and downwards	32
	Teletext: Page selection up-and downwards	42
⓮ +/–	Volume control	32
⓯	Picture mode	32
⓰	Equaliser mode	32
⓱ -/--	Selection of double digit channel numbers	32
⓲	Freezing of TV picture	32
⓳	No function on this set	
⓴	Teletext: Switching on	42
㉑	TV: Selecting of TV mode	32
	Teletext: Switching off	42
㉒	Muting of sound on/off	32
㉓ VIDEO I/⏻	VCR: Standby mode	45
Buttons under cover		
㉔	Displaying of the time	32
㉕ CH +/–	VCR operation	45
VTR 1 2 3 4 MDP	Video equipment selector	
◀◀ ▶ ▶▶ ■ ❚❚ ●	Buttons for VCR operation	
㉖	Resetting of picture setting	32

TV-set – front and top

Symbol	Description	See page
A	Headphone jack	46
B 3	S-video input jack	44
C 3, 3	Phono video/audio inputs	44
D ⏻	Indicator for Standby mode	32
E ⏻	Power switch	32
F	Selecting of input source	44
G +/–	Volume control	32
H PROGR +/–	Channel selection up- and downwards	32
I CONTROL	Control panel: Switching on/off	32

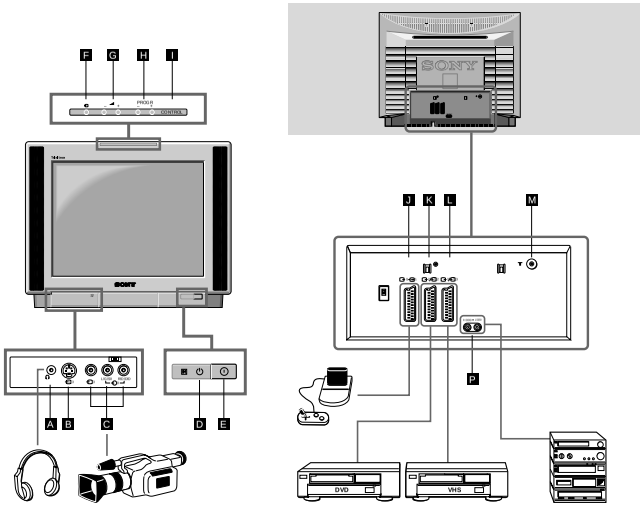

TV-set – rear

Symbol	Description	See page
J 1/ 1	21-pin Euro connector (Scart)	44
K 2/ 2	21-pin Euro connector (Scart)	44
L 3/ 3	21-pin Euro connector (Scart)	44
M	Aerial socket	30
N L/G/S/I R/D/D/D	Audio phono jacks	46

First Time Operation

The following chapter contains all the steps necessary when first installing your TV and the basic TV functions.

Step 1 Installation

A Connecting the TV Set

1 Connect the TV set to the mains socket (220-240 V. AC, 50 Hz).
2a Connect a conventional aerial cable to the socket marked ⅂ M on the rear of the TV set.
or
2b Connect your Satellite Receiver to one of the Scart connectors J K L of the TV set.

When connecting a VCR to your TV set:
We recommend that you use the preset function Manual Programme Preset (page 33) to tune in the VCR signal to programme position 0.

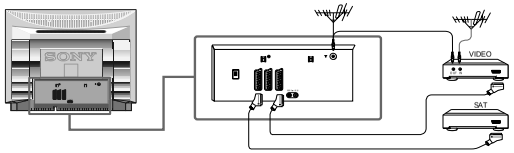

B Inserting the Batteries into the Remote Control

Make sure to insert the batteries using the correct polarities.
Dispose of exhausted batteries according to your local regulations.

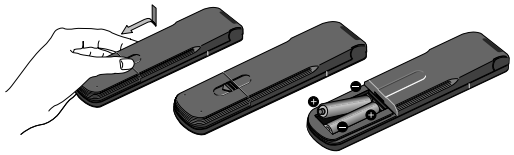

C Switching on the TV Set

- Press the switch ⏻ E at the front of the TV set.

If the standby mode indicator ⏻ D on the TV is lit, press TV I / ⏻ ❶ on the Remote Control to switch on the TV set.

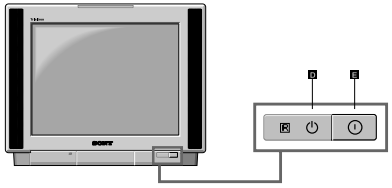

Step 2 Basic Presetting

A The Menu System

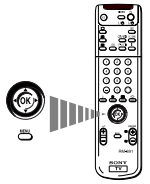

Your TV uses an on-screen menu system to guide you through the operations.
Use the following buttons on the Remote Control to operate the menu system:

- Press MENU ⓬ to switch the menu on and off.
- Use ◄, ►, ▲, ▼ of the joystick ⓫ to select within the menu system.
- Press OK to store.
- When menu is switched off:
  Press ◄ to return to the last menu screen.

B Selecting Language and Country

1 Press the MENU ⓬ button.
The menu Language / Country appears on the screen.
2 Push the joystick ⓫ to ►. Push the joystick ⓫ to ▼ to select the language.
Press OK ⓫.
The menus appear in the selected language.
3 Push the joystick ⓫ to ▼ to select Country. Push the joystick ⓫ to ►.
4 Select the country in which you will operate the TV set using ▼ or ▲.
Confirm by pressing OK ⓫.
The menu Auto Tuning appears.

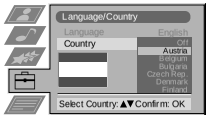

C Automatic Tuning In of Channels

- Push the joystick ⓫ to ►.
After all available channels are stored, the TV goes back to the programme position with which you started the automatic tuning. Your TV is now ready for use.

- To stop the automatic tuning: Press OK ⓫.
- If you wish to change the sequence of the stored channels, go to Sorting Programme Positions in Advanced Presetting.
- If you need to change or repeat the tuning afterwards (e.g. when you move house) : select the menu Auto Tuning in the Set Up menu.

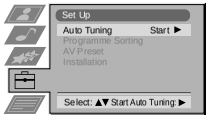

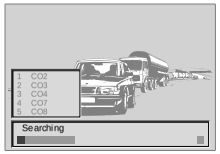

10

Advanced Presetting

Sorting of Programme Positions

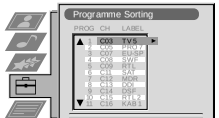

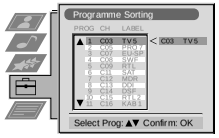

After having used Automatic Tuning of channels you may wish to rearrange the order of the channels.

1 Press MENU. Select the symbol using ▼. Push to ▶.

2 Select Programme Sorting using ▼. Push to ▶ to enter.

3 Select the programme position of the channel you wish to sort using ▲ or ▼. Push to ▶ to enter.

4 Move the channel to the new programme position using ▲ or ▼. Store by pressing OK.
The channel is now at the new position. The other programme positions move accordingly.

5 To sort other programme positions repeat steps 3 to 4.

6 Press MENU to return to the normal TV screen.

Manual Tuning In of Channels

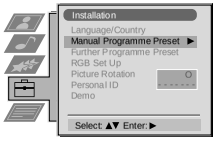

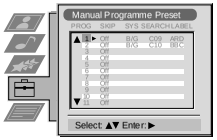

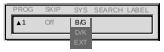

Use this function to preset channels or a video input source one by one to programme positions of your choice.

1 Press MENU. Select the symbol using ▼. Push to ▶.

2 Select Installation using ▼. Push to ▶ to enter.
Select Manual Programme Preset using ▼. Push to ▶ to enter.

3 Select the programme position by pushing to ▲ or ▼. Push twice to ▶.
The column SYS is highlighted.

4 Select the TV system using ▲ or ▼. Push to ▶ to enter.
Available TV systems are B / G for western European countries, D / K for eastern European countries, EXT for a video input source (please go to step 5c after selecting EXT)
The column SEARCH is highlighted.

5 Select your method for the channel tuning using ▲ or ▼. Push to ▶ to enter.
You have the choice between **C** for a terrestrial channel, **S** for a cable channel, **F** for direct frequency input.

a Direct Channel Input - S, C or F

For channel numbers input a two digit number, for the channel frequency a three digit number.

- Select the two or three digits by using the number buttons 0 to 9.
- To start the search and to store the channel, press OK.
- To preset other channels repeat steps 3 to 5a.

b Channel search (SEARCH)

Use Search if you do not know the channel number or frequency

- Start the search for the next available channel by pushing to ▼.
- Store the channel by pressing OK or continue the search by pushing again to ▼.
- To search for other channels repeat steps 3 to 5b.

c For video input sources (EXT)

- Select the Video Input source using ▲ or ▼.
- Store your selection by pressing OK.
- To allocate other sources repeat steps 3 to 5c.

6 Press MENU to return to the normal TV screen.

Advanced Operation

Advanced Presetting

Sorting of Programme Positions

After having used Automatic Tuning of channels you may wish to rearrange the order of the channels.

1 Press MENU. Select the symbol using ▼. Push to ▶.

2 Select Programme Sorting using ▼. Push to ▶ to enter.

3 Select the programme position of the channel you wish to sort using ▲ or ▼. Push to ▶ to enter.

4 Move the channel to the new programme position using ▲ or ▼. Store by pressing OK.
The channel is now at the new position. The other programme positions move accordingly.

5 To sort other programme positions repeat steps 3 to 4.

6 Press MENU to return to the normal TV screen.

Manual Tuning In of Channels

Use this function to preset channels or a video input source one by one to programme positions of your choice.

1 Press MENU. Select the symbol using ▼. Push to ▶.

2 Select Installation using ▼. Push to ▶ to enter.
Select Manual Programme Preset using ▼. Push to ▶ to enter.

3 Select the programme position by pushing to ▲ or ▼. Push twice to ▶.
The column SYS is highlighted.

4 Select the TV system using ▲ or ▼. Push to ▶ to enter.
Available TV systems are B / G for western European countries, D / K for eastern European countries, EXT for a video input source (please go to step 5c after selecting EXT)
The column SEARCH is highlighted.

5 Select your method for the channel tuning using ▲ or ▼. Push to ▶ to enter.
You have the choice between **C** for a terrestrial channel, **S** for a cable channel, **F** for direct frequency input.

a Direct Channel Input - S, C or F

For channel numbers input a two digit number, for the channel frequency a three digit number.

- Select the two or three digits by using the number buttons 0 to 9.
- To start the search and to store the channel, press OK.
- To preset other channels repeat steps 3 to 5a.

b Channel search (SEARCH)

Use Search if you do not know the channel number or frequency

- Start the search for the next available channel by pushing to ▼.
- Store the channel by pressing OK or continue the search by pushing again to ▼.
- To search for other channels repeat steps 3 to 5b.

c For video input sources (EXT)

- Select the Video Input source using ▲ or ▼.
- Store your selection by pressing OK.
- To allocate other sources repeat steps 3 to 5c.

6 Press MENU to return to the normal TV screen.

Captioning a Station Name

During presetting the channels are usually labelled automatically.
You can, however, individually name a channel or a video input source.

1 Press MENU. Select the symbol using ▼. Push to ▶.

2 Select Installation using ▼. Push to ▶ to enter.
Select Manual Programme Preset using ▼. Push to ▶ to enter.

3 Select the programme position of the channel or the video source you wish to label by pushing to ▼ or ▲. Push repeatedly to ▶ until the first element of the position LABEL is highlighted.

4 Select a number, a letter, + or a blank using ▲ or ▼. Push to ▶ to confirm.
Select the other four characters in the same way.

5 Store your selection by pressing OK.

6 To label other channels or video sources repeat steps 3 to 5.

7 Press MENU to return to the normal TV screen.

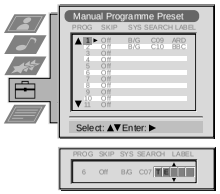

Skipping of Programme Positions

In case of 100 programme positions there may be unused positions, which you can skip in the menu Manual Programme Preset. When changing channels with the PROGR +/– buttons they do then not appear.
You can, however, still select them using the number buttons.

1 Press MENU. Select the symbol using ▼. Push to ▶.

2 Select Installation using ▼. Push to ▶ to enter.
Select Manual Programme Preset using ▼. Push to ▶ to enter.

3 Select the programme position you wish to skip by pushing to ▲ or ▼.
Push to ▶ to enter.
The column SKIP is highlighted.

4 Select ON using ▼.

5 Store by pressing OK.

6 To skip other programme positions repeat steps 3 to 5.

7 Press MENU to return to the normal TV screen.

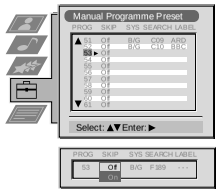

Using of Further Programme Preset

Using the menu Further Programme Preset you can

a) individually adjust the volume level of each channel.

b) improve the quality of a weak channel (picture or sound distortions) with manual fine tuning.

c) preset the AV output for programme positions of those channels with scrambled signals (e.g. from a Pay TV decoder). In this way a connected VCR records the unscrambled signal.

1 Press MENU. Select the symbol using ▼. Push to ▶.

2 Select Installation using ▼. Push to ▶ to enter. Select Further Programme Preset using ▼. Push to ▶ to enter.

3 Select the programme position of the desired channel by pushing to ▲ or ▼.
Push repeatedly to ▶ to select:
VOL (Volume Offset), AFT (Automatic Fine Tuning) or DECODER.
The selected item changes colour.

4a **VOL**
Push to ▲ or ▼ to adjust the volume level (range -7 to +7) of the channel.
Store by pressing OK.
Repeat steps 3 and 4a if you wish to adjust the volume level of other channels.

b **AFT**
Push to ▼ to select OFF. Push to ▶ to enter Manual Fine Tuning. Push to ▲ or ▼ to fine tune the channel (range -15 to +15). Store by pressing OK.
Repeat steps 3 and 4b if you wish to fine tune other channels.

c **DECODER**
Push to ▲ or ▼ to select AV1 (Euro AV socket 1) or AV2 (Euro AV socket 2) as output for the video source on this programme position. Store by pressing OK.
Repeat steps 3 and 4c if you wish to preset the AV output of other video sources.

Should you use Auto Tuning afterwards, this setting will be cancelled.

5 Press MENU to return to the normal TV screen.

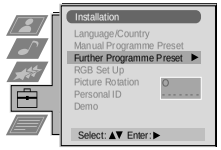

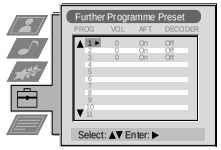

Adjusting the Picture Geometry for an RGB Source

When connecting an RGB source such as a Sony playstation you may need to readjust the picture geometry.

1 Select the connected RGB source by pressing repeatedly.
2 Press MENU. Select the symbol using ▼. Push to ▶.
3 Select Installation using ▼. Push to ▶ to enter. Select RGB Set Up using ▼. Push to ▶ to enter.
4 Select H Centre by pushing to ▶. Adjust the centre of the picture (range from -5 to +5) using ▲ or ▼. Store by pressing OK.
5 Select H Size using ▼. Push to ▶ to enter. Adjust the horizontal coordinates (range from -5 to +5) using ▲ or ▼. Store by pressing OK.
6 Press MENU to return to the normal TV screen.

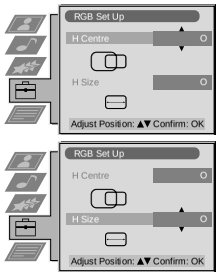

Adjusting the Picture Rotation

Because of the earth magnetism the picture might slant. In this case you can readjust the picture.

1 Press MENU. Select the symbol using ▼. Push to ▶.
2 Select Installation using ▼. Push to ▶ to enter. Select Picture Rotation using ▼. Push to ▶ to enter.
3 Adjust the Picture Rotation (adjusting range -4 to +4) by pushing to ▲ or ▼. Store by pressing OK.
4 Press MENU to return to the normal TV picture.

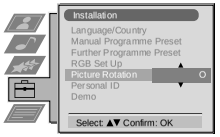

Inputting Your Personal ID

You can programme your TV with a safety code, so that you can be traced if your TV is stolen and recovered. This code can only be input once!
Make sure to write it down in this Instruction Manual.

1 Press MENU. Select the symbol using ▼. Push to ▶.
2 Select Installation using ▼. Push to ▶ to enter. Select Personal ID using ▼. Push to ▶ to enter.
3a Select the first of a total of 11 characters (letter, number, + or a blank) by using ▲ or ▼.
b Push to ▶ to go to the next character.
c Repeat a and b for all characters.
4 Store by pressing OK.
5 Press MENU to return to the normal TV screen.

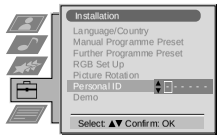

Presetting and Labelling of Input Sources

Using AV Preset you can select the automatic format function and label an input source.

1 Press MENU. Select the symbol using ▼. Push to ▶.
2 Select AV Preset using ▼. Push to ▶ to enter.
3 Select the desired AV input (AV 1, 2 or 3) using ▲ or ▼. Push to ▶ enter.

After each step you have the choice between memorizing (press OK) or going to the next item (push to ▶).

4 **For automatic format selection of the AV input:**
a Push to ▶ to select Auto Format.
b Select On or Off using ▲ or ▼.
5 **To label the source:**
a Push to ▶ to select Label.
b Select the first character using ▲ or ▼. Push to ▶ to confirm.
c Repeat step b to select the other 4 characters.
d Store by pressing OK.
6 Repeat steps 3 to 5 for the other AV inputs.
7 **Selecting the AV3 Input Source:**

In case of AV3 you have the choice between the front AV3 sockets B C or the rear Scart 3 L connector.

a Push to ▼ to select AV3 Input. Push to ▶ to enter.
b Select Front or Rear using ▲ or ▼.
c Store by pressing OK.
8 Press MENU to return to the normal TV screen.

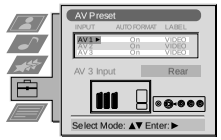

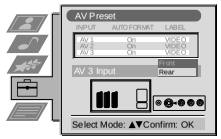

Advanced TV operation

Adjusting Picture and Sound

Picture and sound are adjusted at the factory. You can, however, adjust them individually.

1 Press MENU.
Select the symbol for Picture or for Sound using ▲ or ▼.
Push to ► to enter.
The menu Picture or Sound Control is displayed.

2 Select the desired item using ▲ or ▼. Push to ► to enter.

3 Adjust the selected item using ▲, ▼, ► and ◄. Press OK to store.

Refer to the tables on this and the following page for more information.

4 Repeat steps 2 and 3 to adjust other items.

5 Press MENU to return to the normal TV screen.

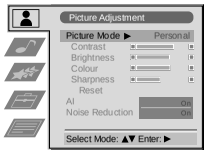

Picture Control

Item	Effect/Operation
Picture Mode	▼ Personal (for individual settings) Movie (for movie broadcasts) ▲ Live (for live broadcasts)
Contrast	Less ◄ ► More
Brightness*	Darker ◄ ► Brighter
Colour*	Less ◄ ► More
Hue**	Greenish ◄ ► Reddish
Sharpness*	Softer ◄ ► Sharper
Reset	Resets picture to the factory preset levels
AI (Artificial Intelligence)	▼ Off: normal ▲ On: Automatic optimization of contrast level according to the TV signal
Noise Reduction	▼ Off: Normal ▲ On: Reduces picture noise in case of a weak broadcasting signal

* Only if Personal is selected in Picture Mode
** Only available for NTSC colour signal (e.g. US video tapes)

Sound Control

Item	Effect/Operation
Equaliser Mode	Select between the following sound settings ▲ Personal Vocal Jazz Rock Pop ▼ Flat (fixed setting, cannot be adjusted)
Equaliser adjustment	You can adjust the mode selected in Equaliser mode by cutting and boosting of 5 selected frequency bands. Only the changes made in Personal can be stored, the others return to factory setting. Select the desired bar using ► or ◄, adjust using ▲ and ▼. Press OK to store.
Balance	▲ More left ▼ More right
Loudness	▲ Off: Normal ▼ On: For music broadcasts
Space	▲ Off: Normal ▼ On: Special accoustic effect
Auto Volume Control	▼ On: volume level of the channels will stay the same independent of the broadcast signal (e.g. in case of advertisements) ▲ Off: volume level changes according to the broadcast signal
Dual Sound	• For a bilingual broadcast: A for channel 1◄ ►B for channel 2 • For a stereo broadcast: Stereo◄ ►Mono For a Nicam broadcast: When receiving a Nicam broadcast »NICAM« appears briefly on the screen.
Headphones Volume Dual Sound	Less◄ ►More • For a bilingual broadcast: A for channel 1◄ ►B for channel 2 • For a stereo broadcast: Stereo◄ ►Mono • PIP When PIP is switched on, you can additionally select the PIP sound for the headphones

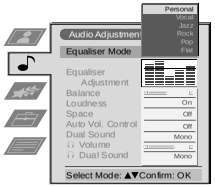

Using the Features Menu

1 Press MENU. Select the symbol using ▼. Push to ►.
2 Select the desired menu item using ▼. Push to ► to enter.
3 Select the desired setting using ▲ or ▼.
4 Store by pressing OK.
5 Press MENU to return to the normal TV screen.

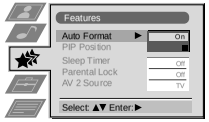

Features

Item	Effect/Operation
Auto Format	▼ On: Automatic selection of the screen format ▲ Off: Normal mode
PIP Position	See next page for details
Sleep Timer	You can select a time period after which the TV switches itself into standby mode ▼ Off 10 min. 20 min. ⋮ ▲ 90 min.
Parental Lock	▼ Off: Normal mode ▲ On: TV can only be switched on out of standby-mode using the Remote Commander, the buttons on the TV do not work.
AV2 Source	You can select the source to be output from the Scart connector 2 / 2. In this way you can record from this socket while watching another source. ▼ TV audio / video signal from the aerial AV1 audio / video signal from Scart 1 AV2 audio / video signal from Scart 2 ▲ AV3 audio / video signal from front or rear connectors

Using Picture-in-Picture

Picture-in-Picture (PIP) lets you display a second, small screen within the main TV picture. In this way you can watch the video output from any connected equipment, e.g., from a VCR, while watching TV.

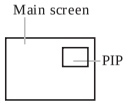

Switching PIP on and off

- Press / 6.

The small screen is displayed.

The source of the small screen is the one last used when the TV was on.

- Press / 6 again to switch PIP off.

Selecting a PIP source

1 Press 5.

The symbol is displayed in the bottom left-hand corner of the screen.

2 Press 3 repeatedly until the desired source appears.

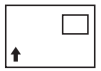

You can select between
TV, AV1, AV2, YC2, AV3 and YC3.

- If no video source (e.g. VCR or Camera) is connected, the PIP will be noisy.
- You cannot display an RGB source in the PIP.

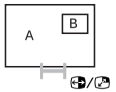

Swapping the screens

- Press / 4.

The two screens are swapped.

Changing channels if the TV picture is in the PIP

- First press , then the respective number buttons.

Changing the PIP position

There are four different positions of the small screen within the main screen. Select the PIP position in the Features menu.

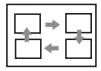

1 Press MENU. Select the symbol using ▼. Push to ► to enter.
2 Select PIP position by pushing to ▼. Push to ► to enter.
3 Select the desired position using ▼ or ▲. Press OK to select.
4 Press MENU to return to the normal TV screen.

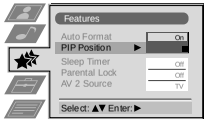

Teletext

Most TV channels broadcast information via teletext. The index page of the teletext service (usually page 100) gives you information on how to use their service.

! Make sure to use a TV channel with a strong signal, otherwise there may be Teletext errors.

Direct Access Functions

Switching Teletext on and off

1 Select the TV channel which carries the teletext service you want to view.

2a Press ⓴ once to switch teletext on.
The teletext menu is displayed.
b Press twice for Mix mode.
The TV broadcast and the Teletext display are overlapped.

3 Press ㉑ or press a third time to switch teletext off.

Selecting a Teletext Page

Direct Page Selection

- Input the three digits of the page number using the number buttons ❼.

If you have made a mistake:
Type in any three digits, then reenter the correct page number.

Page Catching

1 Select a teletext page which has several page numbers on it (e.g., the index page).

2 Press OK ⓫.
Page Catching is displayed at the top of the page

3 Select the desired page number using ▲ or ▼ ⓫ and press OK.
The requested page is displayed after some seconds.

Selecting the next or the preceding page

- Press ⓭ (Page +) or (Page -).

Selecting the index page

- Press ❷.

Selecting a subpage

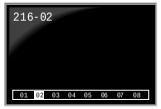

A teletext page may consist out of several subpages. In this case an information line is displayed, showing the number of the subpages.

- Select the mode by pushing to ▲. Select the subpage by using ▲ or ▼.

Freezing a Teletext subpage

1 Press ❸ or
The symbol ❸ is displayed and the subpage is not updated.

2 Press ⓴ to resume normal teletext reception.

Using Fastext*

*depending on availability of service

Fastext lets you access pages with one button stroke. When Fastext is broadcast, a colour-coded menu appears at the bottom of the screen. The colours of this menu correspond to the red, green, yellow and blue buttons on the Remote Control ❾, ❿, ⓮, ⓯.

- Press the coloured button which corresponds to the colour in the colour-coded menu.

Using the Teletext Menu

This TV set has a menu-guided teletext system. When teletext is switched on you can use the joystick buttons to operate the teletext menu.

Select the menu functions as follows:

1 Press MENU ⓬.
The Teletext menu is superimposed on the teletext display.

2 Select the teletext function using ▲ or ▼ ⓫. Push to ▶ to enter.

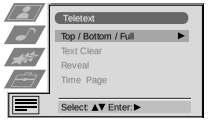

Top/Bottom/Full

For convenient reading of a Teletext page you can enlarge it.
After having selected the function, a sub menu Top ▲ Bottom ▼ Full OK is displayed.

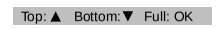

- Push to ▲ to enlarge the upper half of the screen, push to ▼ to enlarge the lower half. Press OK to resume the normal size.

Text Clear

After having selected the function, you can watch a TV channel while waiting for a requested Teletext page. As soon as the page is available, the symbol changes colour.

- Press to view the page.

Reveal

Some teletext pages contain hidden information (e.g., for a quiz), which you can reveal.
After having selected the function, the hidden information appears.

- Press to resume the normal Teletext operation.

Time Page*

*depending on availability of service

You can call up a time-coded page - such as an alarm page - at a time specified by you.

After having selected the function a sub menu is displayed.

1 Select On using ▲ or ▼. Push to ▶ to enter.

2 Enter the three digits of the desired page using the number buttons ❼.
Push to ▶ after each digit.

3 Enter the four digits of the desired time using the number buttons ❼.
Push to ▶ after each digit.

4 Press OK to store.
The time is displayed in the top left-handed corner of the screen.
At the requested time the page is displayed.

SECTION 2
DISASSEMBLY

2-1. REAR COVER REMOVAL

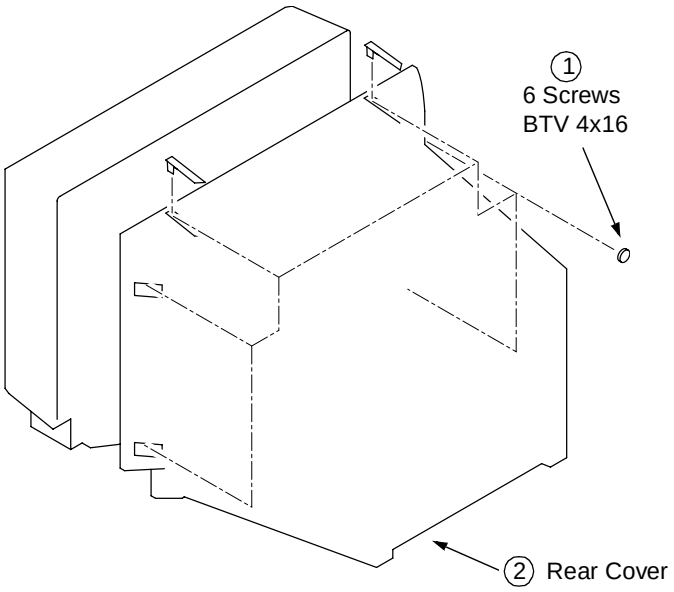

2-2. CHASSIS ASSY REMOVAL

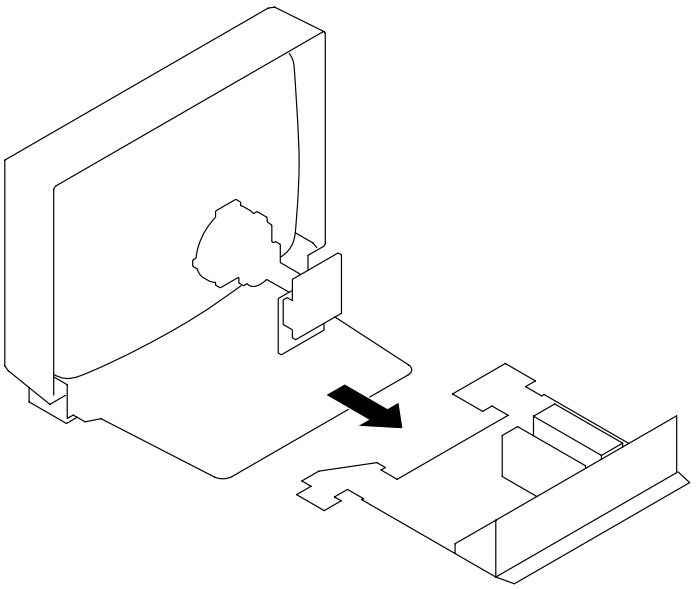

2-3. SERVICE POSITION

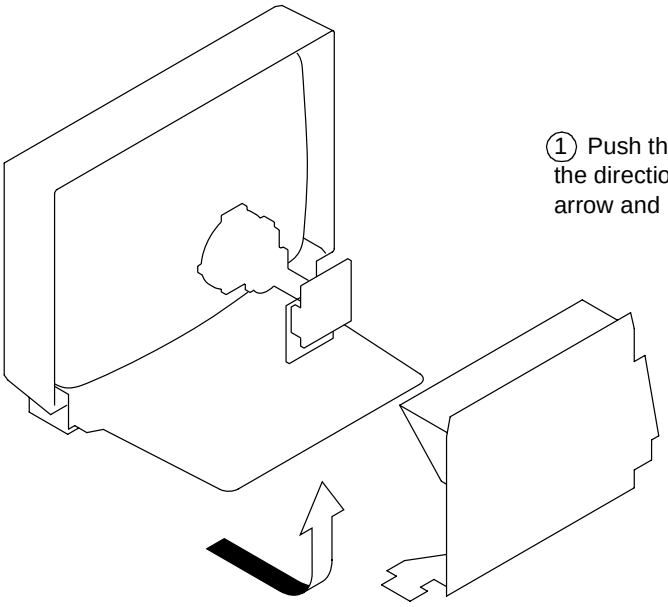

2-4. U BOARD REMOVAL

1 Push the claw in the direction of the arrow and remove.

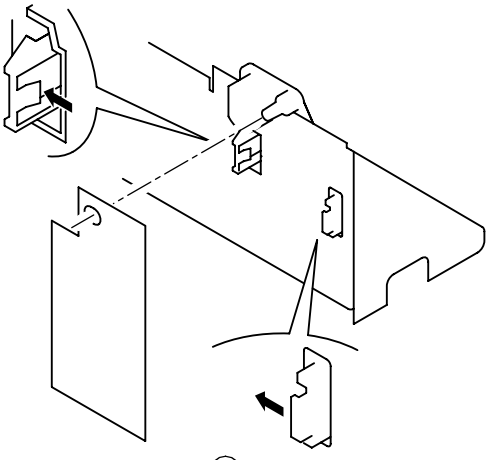

2 Pull the Board in the direction of the arrow and remove.

2-5. J BOARD REMOVAL

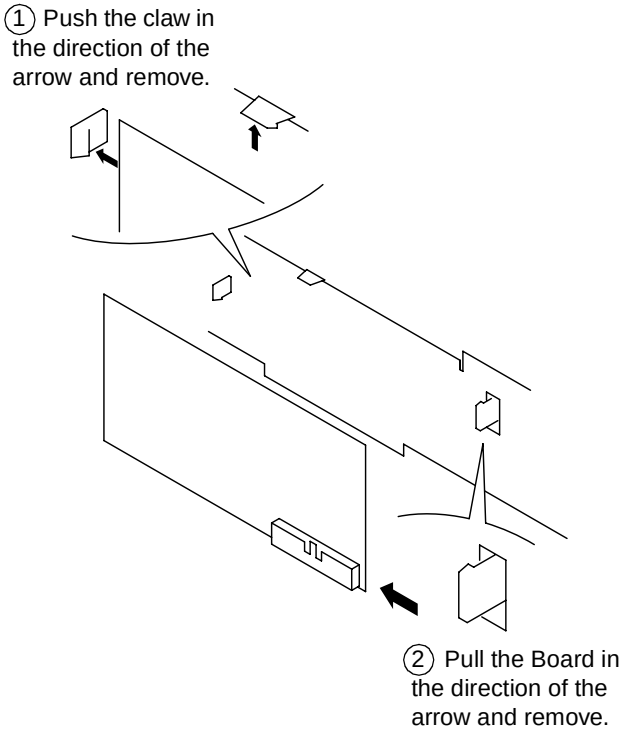

2-6. J SHIELD REMOVAL

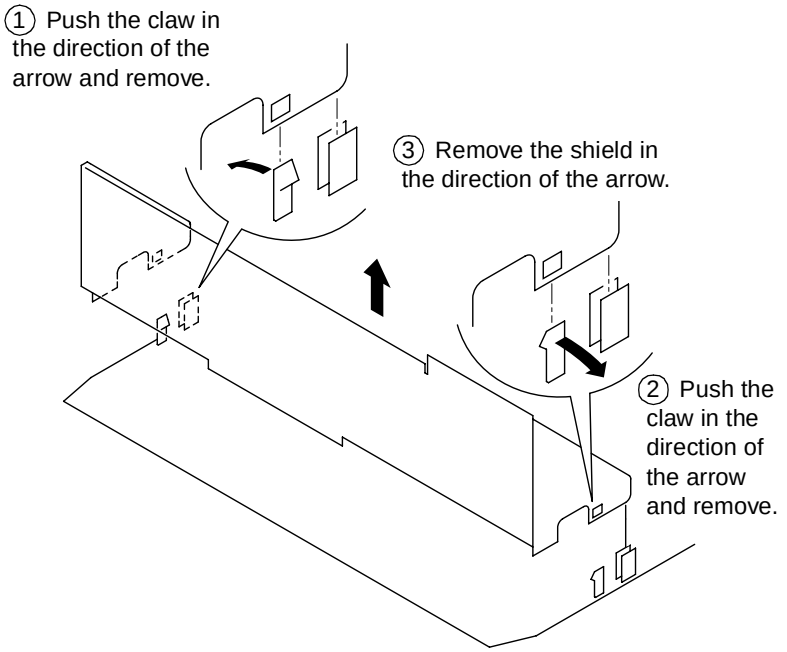

2-7. B2 BOARD REMOVAL

NOTE

All other boards are removed in a similar manner to those shown

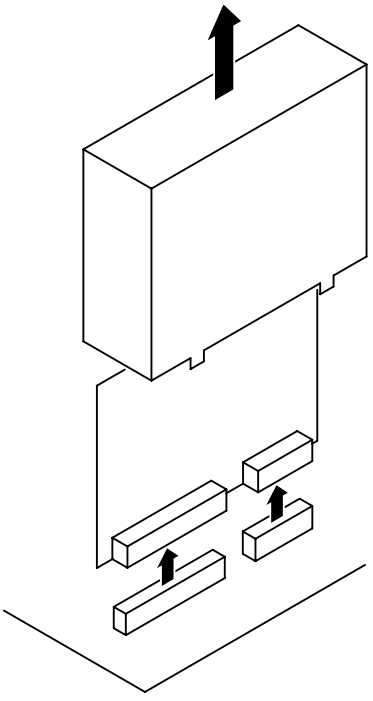

2-8. PICTURE TUBE REMOVAL

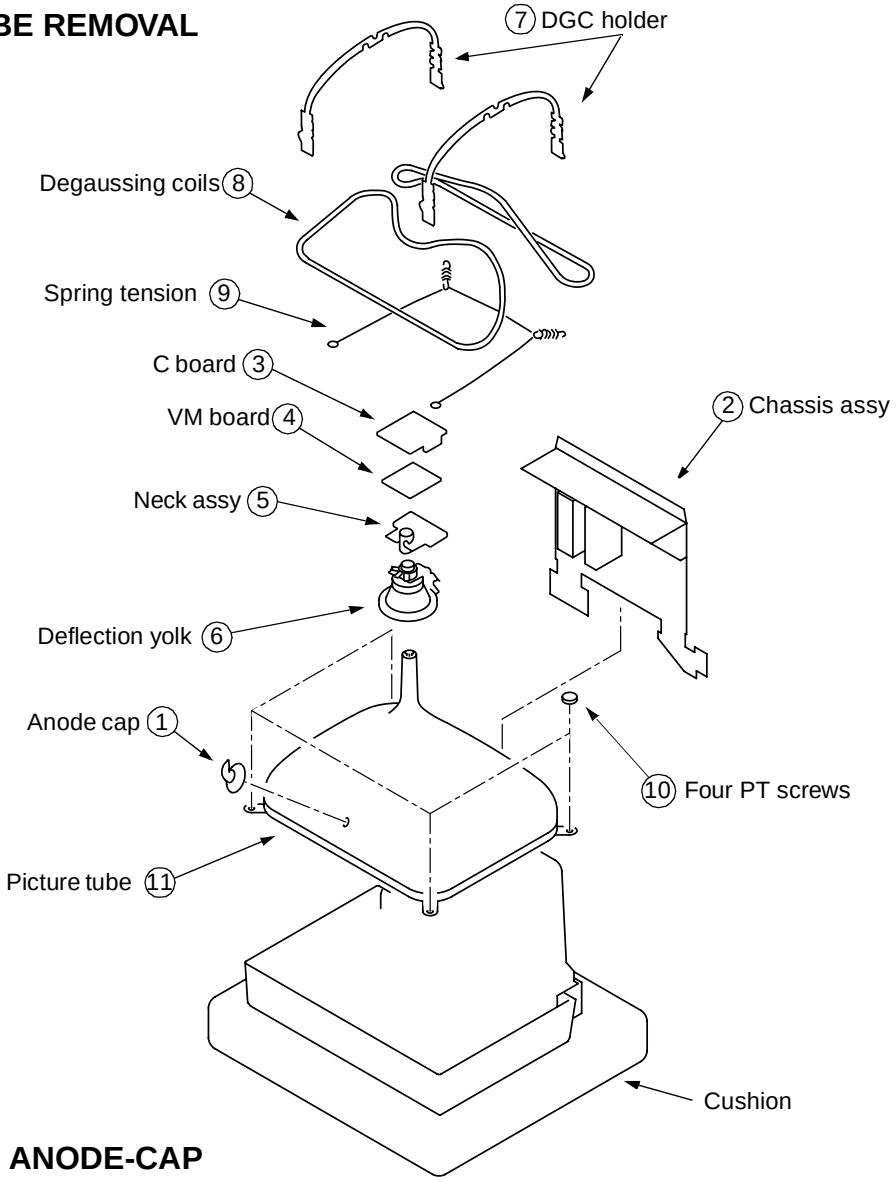

• REMOVAL OF ANODE-CAP

Note : Short circuit the anode of the picture tube and the anode cap to the metal chassis, CRT shield or carbon paint on the CRT, after removing the anode.

*** REMOVING PROCEDURES.**

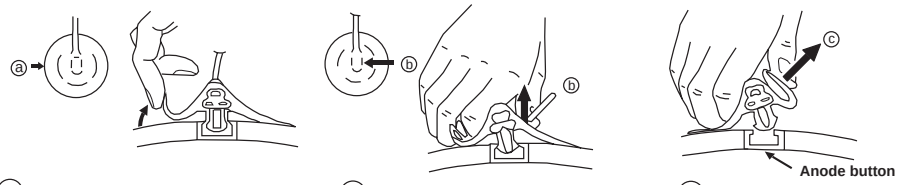

① Turn up one side of the rubber cap in the direction indicated by the arrow ⓐ

② Using a thumb pull up the rubber cap firmly in the direction indicated by the arrow ⓑ

③ When one side of the rubber cap is separated from the anode button, the anode-cap can be removed by turning up the rubber cap and pulling it up in the direction of the arrow ⓒ

• HOW TO HANDLE THE ANODE-CAP

① To prevent damaging the surface of the anode-cap do not use sharp materials.
② Do not apply too great a pressure on the rubber, as this may cause damage to the anode connector.
③ A metal fitting called a shatter hook terminal is fitted inside the rubber cap. Do not turn the rubber foot over excessively this may cause damage if the shatter hook sticks out.

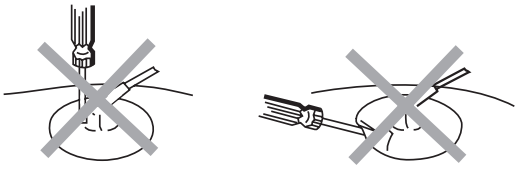

REMOVAL AND REPLACEMENT OF THE MAIN-BRACKET BOTTOM PLATES.

⚠ For safety reasons, on no account should the plates be removed and not refitted after servicing.

(1) REMOVING THE PLATES

In the event of servicing being required to the solder side of the D Board printed wiring board, the bottom plates fitted to the main chassis bracket require to be removed.
This is performed by cutting the gates with a sharp wire cutter at the locations indicated by arrows.

Note : There are 4 plates fitted to the main bracket and secured by 4 gates.
Only remove the necessary plate to gain access to the printed wiring board.

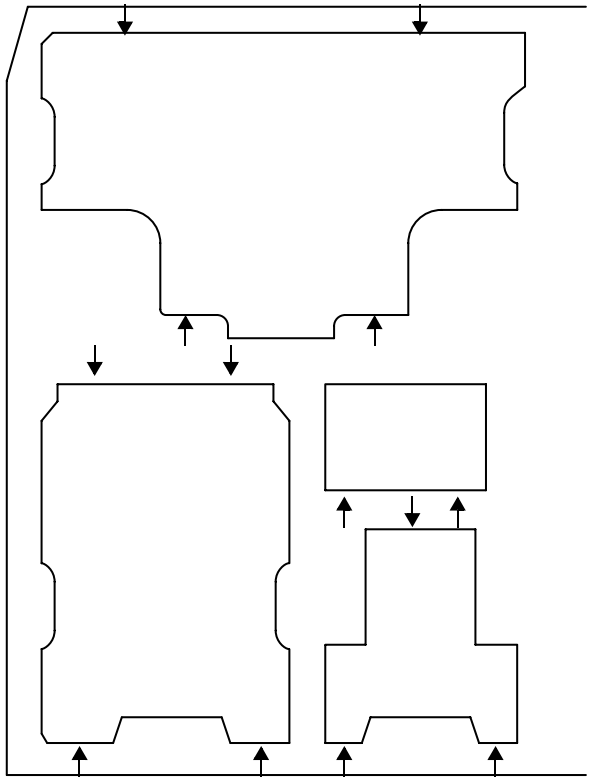

(2) REFITTING THE PLATES

Because the plates differ in size it is important that the correct plates are refitted in their original location.

Please note that the plates need to be rotated 180 degrees from the cut position to allow the tabs to be fitted in the catch positions.

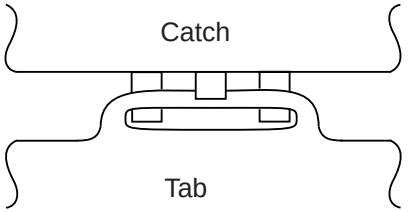

SECTION 3
SET-UP ADJUSTMENTS

- When complete readjustment is necessary or a new picture tube is installed, carry out the following adjustments.
- Unless there are specific instructions to the contrary, carry out these adjustments with the rated power supply.
- Unless there are specific instructions to the contrary, set the controls and switches to the following settings:

Contrast ..... normal

Brightness ..... normal

Carry out the following adjustments in this order:

3-1. Beam Landing
3-2. Convergence
3-3. Focus
3-4. White balance

Note: Test equipment required
1. Color bar/pattern generator.
2. Degausser.
3. Digital multimeter.
4. Oscilloscope.

3-1. BEAM LANDING

Preparation:

1. In order to reduce the influence of geomagnetism on the set's picture tube, face it in an easterly or westerly direction.
2. Switch on the set's power and degauss with the degausser.

(1) Adjustment of Correction Magnet for Y-Splitting Axis

1. Input a crosshatch signal from the pattern generator.
2. Set the Picture control to minimum and confirm that the Brightness control is set to normal.
3. Position the neck assembly as indicated in Fig.3-2.
4. Move the deflection yolk as far forward as is possible.
5. Adjust the upper and lower pin symmetrically by opening or closing the Y-splitting axis correction magnets located on the neck assembly.
6. Return the deflection yolk to its original position.

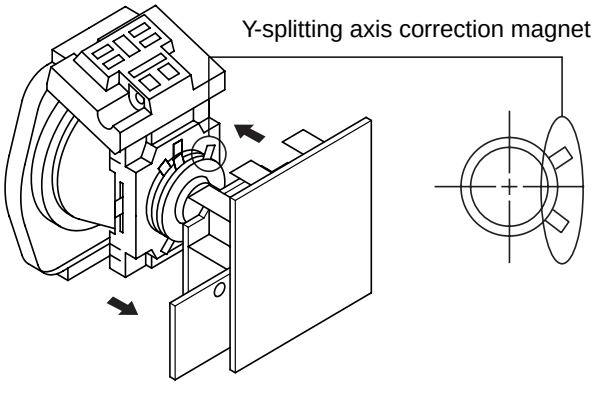

Caution :

High voltages are present on the Deflection yolk terminals - take care when handling the Deflection yolk whilst carrying out adjustments.

(2) Landing

Note : Before carrying out the following adjustments adjust the magnets as indicated below [See Fig.3-3].

1. Input an all-white signal from the pattern generator. Maximize the picture setting and adjust the Brightness setting.
2. Rough-adjust the focus and horizontal convergence.
3. Loosen the deflection yolk screws and align the purity adjustment knob to its central position. [See Fig.3-1].
4. Switch from the all-white pattern to an all-green pattern.
5. Move the deflection yolk backwards and adjust with the purity magnet so that the green is at the centre and it aligns symmetrically. [See Fig.3-4].
6. Move the deflection yolk forward and adjust so that the entire screen becomes green.
7. Switch the raster signal to red, then to blue and verify the landing condition.
8. When the position of the deflection yolk has been determined, fasten the deflection yolk with the screw.
9. If the beam does not land correctly in all the corners of the screen, use magnets to correct it. [See Fig.3-5].

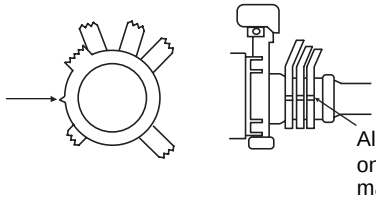

Fig.3-3

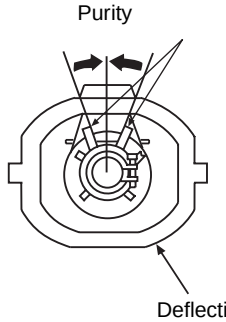

Fig.3-1

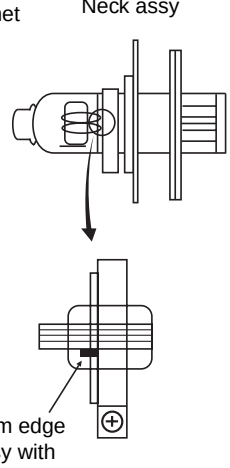

Fig.3-2

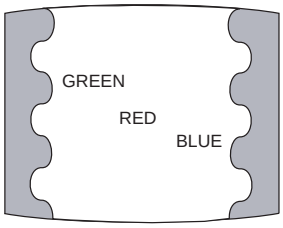

Fig.3-4

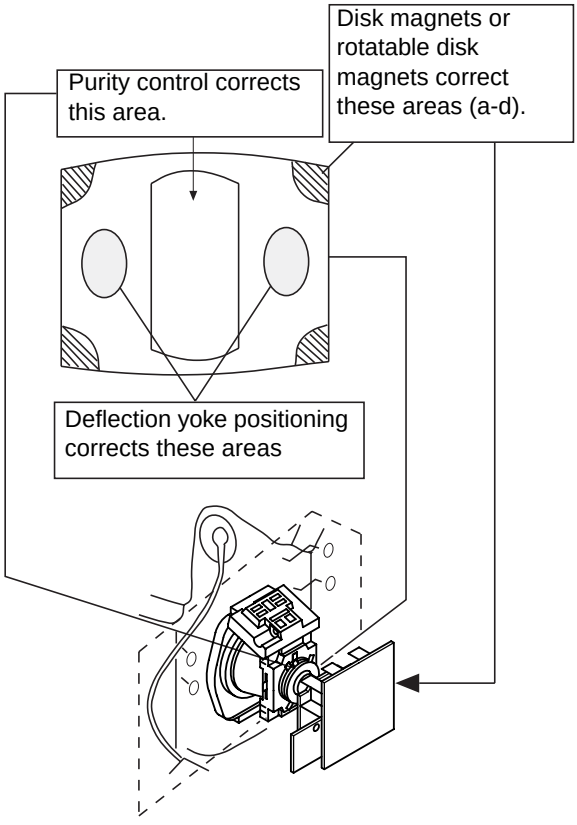

Fig. 3-5

3-2. CONVERGENCE

(1) Screen centre convergence [Static convergence]

1. Input a dot signal from the pattern generator. Normalize the picture setting.
2. [Moving horizontally], adjust the H.STAT control so that the horizontal red, green and blue dots coincide at the centre of the screen.
3. [Moving vertically], adjust the V.STAT magnet so that the vertical red, green and blue dots coincide at the centre of the screen.

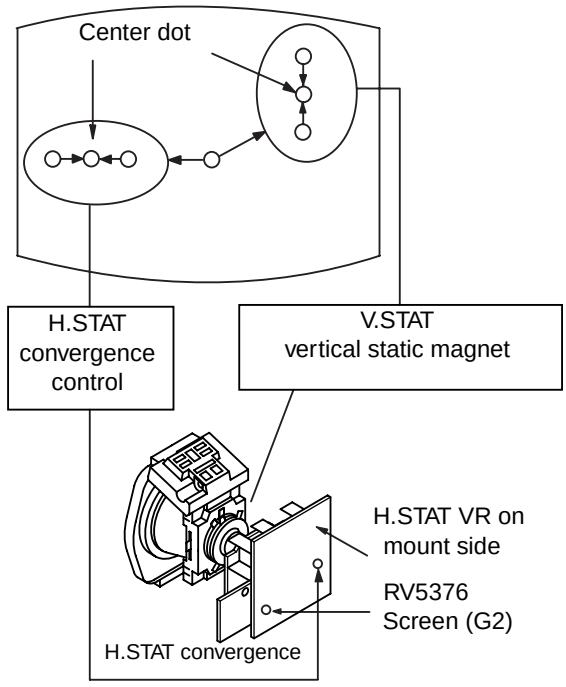

- If the horizontal dots are unable to coincide with the variable range of the H.STAT convergence, adjust together with the V.STAT convergence while tracking.
  [Adjust the convergence by tilting the V.STAT convergence or by opening and closing the V.STAT convergence.]

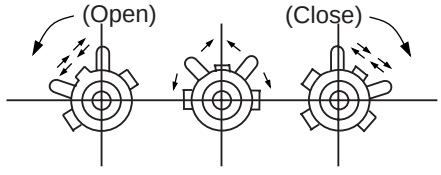

4. Movement of the red, green and blue dots by tilting the V.STAT magnet and by opening or closing the V.STAT magnet.

a). By opening or closing the V.STAT magnet, the red, green and blue dots move as indicated below.

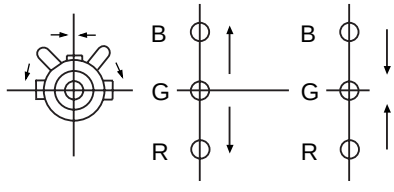

b). By rotating the V.STAT magnet counter clockwise, the red, green and blue dots move as indicated below.

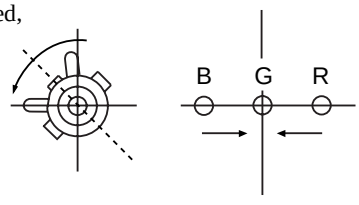

c). By rotating the V.STAT magnet clockwise, the red, green and blue dots move in the direction indicated below.

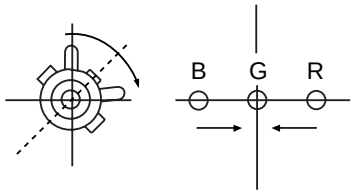

d). By opening or closing the V.STAT magnet, the red, green and blue dots move in the direction indicated below.

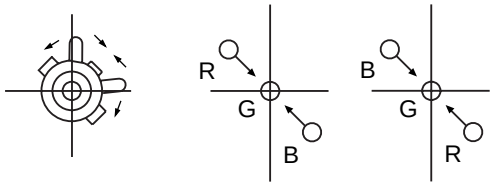

Note : If the blue dot does not coincide with the red and green points correct the points by using the BMC [Hexapole] magnet.

5. Correction for HMC [horizontal mis-convergence] and VMC [vertical mis-convergence] by using the BMC [Hexapole] magnet.

a). HMC correction by BMC [Hexapole] magnet and movement of the electron beam.

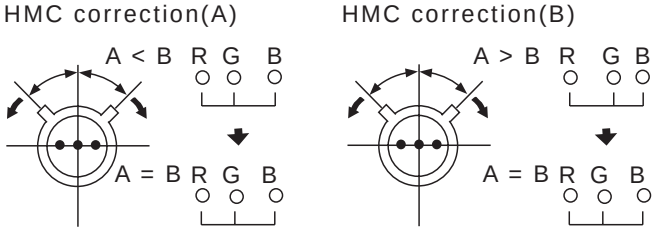

b). VMC correction by BMC [Hexapole] magnet and movement of the electron beam.

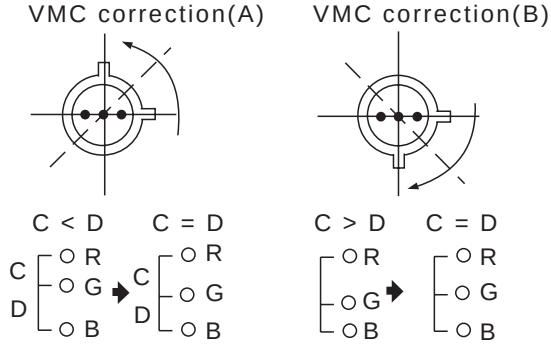

HAMP

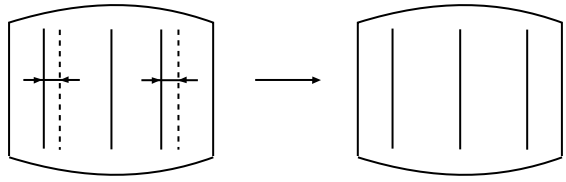

7. HTIL correction can be performed by adding a THL correction ASSY to the DY.

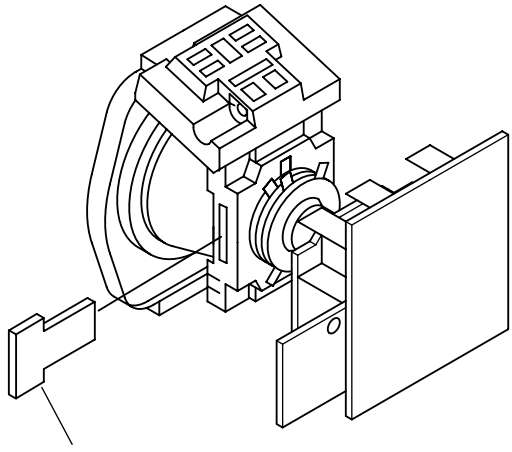

HTIL

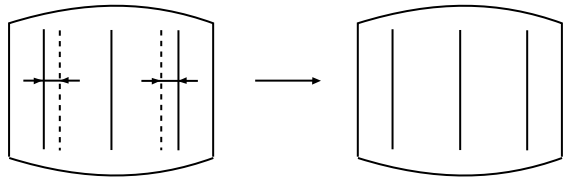

Layout of each control

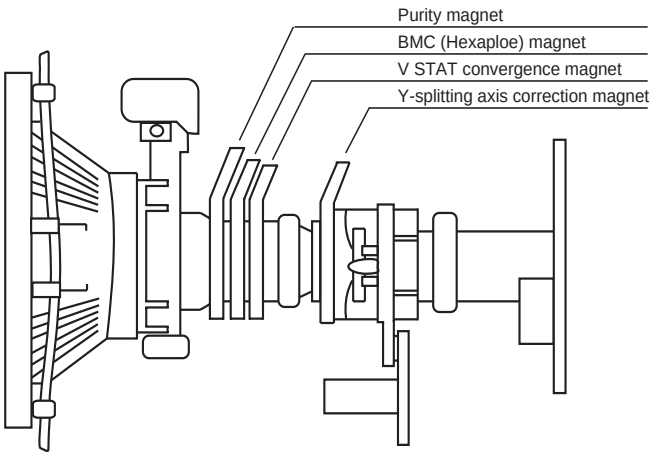

Fig 3-5

Note : If you are unable to adjust the corner convergence properly, this can be corrected with the use of permalloys.

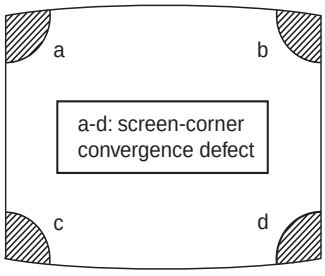

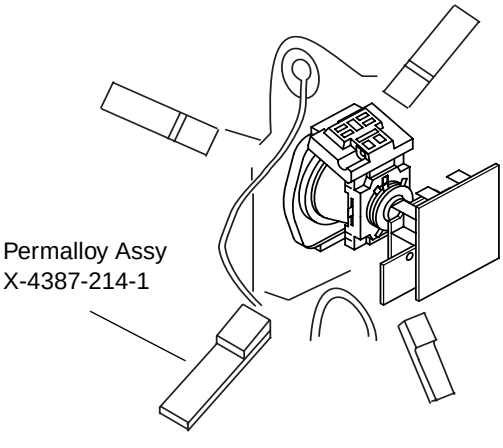

Convergence adjustment with permalloy

3-3. FOCUS

1. Receive a television broadcast signal.
2. Normalize the picture setting.
3. Adjust the focus control located on the flyback transformer to obtain the best focus at the centre of the screen.
   Bring only the centre area of the screen into focus, the magenta-ring appears on the screen. In this case, adjust the focus to optimize the screen uniformly.

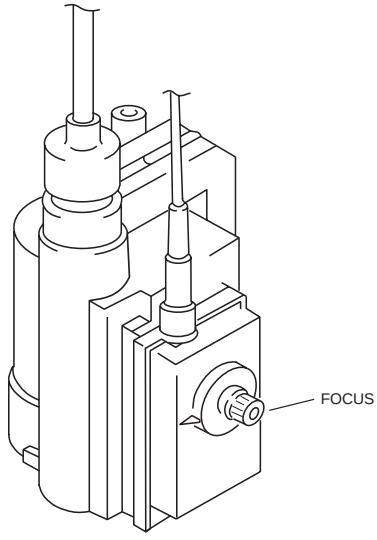

3-4. SCREEN (G2), WHITE BALANCE

[Adjustment in the service mode using the remote commander]

G2 adjustment (RV5376)

1. Input a dot signal from the pattern generator.
2. Set the Picture, Brightness and Colour to minimum.
3. Apply 175V DC from an external power supply to the R, G and B cathodes of the CRT.
4. Whilst watching the picture, adjust the G2 control RV5376 [SCREEN] located on the C Board to the point just before the flyback return lines disappear.

White balance adjustment for TV mode

1. Input an all-white signal.
2. Enter into the Service Mode by pressing ‘TEST’, ‘TEST’ and ‘MENU’ ‘MENU’on the Service Commander.
3. Select ‘Backend’ from the on screen menu display and press ‘OK’.
4. The ‘Backend’ menu will appear on the screen.
5. Set the contrast to MAX.
6. Set the ‘R DRIVE’ to 41.
7. Adjust the ‘G DRIVE’ and ‘B DRIVE’ so that the white balance becomes optimum.
8. Press the ‘OK’ button to write the data for each item.
9. Set the contrast to MIN.
10. Set the ‘R CUT-OFF’ to 31.
11. Adjust the ‘G CUT-OFF’, and ‘B CUT-OFF’ with the left and right buttons on the remote commander so that the white balance becomes optimum.
12. Press the ‘OK’ button to write the data for each item.

Backend

No	Descr.	Def	Min	Max	Data
1	R-on	ON	OFF	ON	ON
2	G-on	ON	OFF	ON	ON
3	B-on	ON	OFF	ON	ON
4	D-col	OFF	OFF	ON	ON
5	Color-axis	2	0	3	2
6	Contrast	63	0	63	63
7	Limit-Luv	3	0	3	3
8	Hue	31	0	63	31
9	Colour	31	0	63	28
10	CTI -Level	2	0	3	2
11	Brightness	31	0	63	31
12	Gamma	2	0	3	2
13	Sharpness	31	0	63	44
14	LTI-Level	0	0	3	0
15	R-Drive	41	0	63	40
16	BLK-Bottom	0	0	3	0
17	G-Drive	41	0	63	38
18	ABL-TH	0	0	3	0
19	B-Drive	41	0	63	21
20	ABL-Mode	2	0	3	2
21	Sub Bright	31	0	63	32
22	VM-Level	2	0	3	2
23	R-Cutoff	31	0	63	41
24	Preover	2	0	3	2
25	G-Cutoff	31	0	63	45
26	DPIC-Level	2	0	3	2
27	B-Cutoff	31	0	63	48
28	DC-Tran	1	0	3	1
29	Sub-Cont	7	0	15	7
30	LRGB2-Lvl	12	0	15	12
31	P-Abl	15	0	15	15
32	DL-Pass	OFF	OFF	ON	OFF
33	Sharp.Fo	ON	OFF	ON	ON
34	Aging-W	OFF	OFF	ON	OFF
35	Aging-B	OFF	OFF	ON	OFF
36	CB-offset1	7	0	15	7
37	CR-offset1	7	0	15	7
38	CB-offset2	7	0	15	7
39	CR-offset2	7	0	15	7
40	Sub Colour	0	-8	8	-1

SECTION 4
CIRCUIT ADJUSTMENTS

4-1. ELECTRICAL ADJUSTMENTS

Service adjustments to this model can be performed using the supplied Remote Commander RM-891.

HOW TO ENTER INTO SERVICE MODE

1. Turn on the main power switch of the set while pressing PROG + (plus) and PROG - (minus) buttons on the top panel.

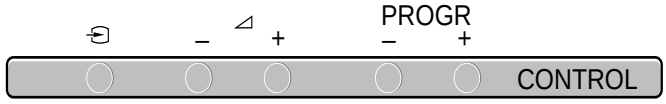

2. "TT" will appear in the upper right corner of the screen.
3. Press the ‘MENU’ button twice on the remote commander to obtain the service menu on the screen.

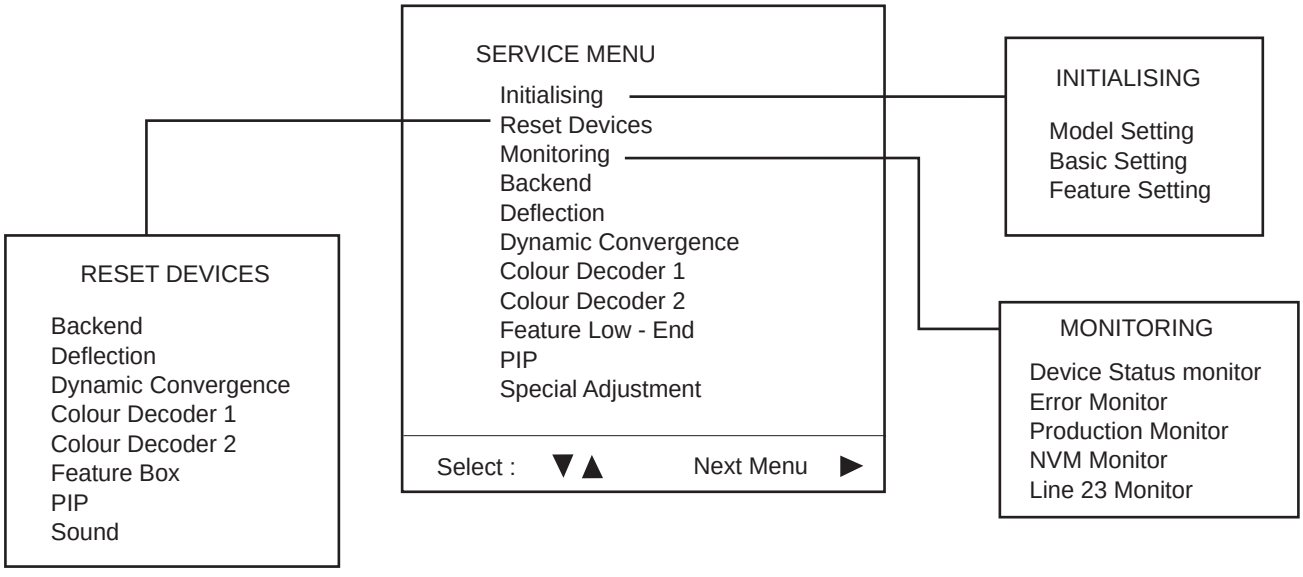

4. Push the joystick up or down on the remote commander to select the adjustment item.
5. Push the right button to proceed to the next menu.
6. If the required adjustment item is ‘Deflection’, push the down button to move to ‘Deflection’.
7. Push the joystick to the right to enter into ‘Deflection’.
8. Change the data in order to comply with each standard.

NOTE:
- Before performing any adjustments assure that the correct model has been selected in the Model Setting menu.
- After carrying out the service adjustments, to prevent the customer accessing the Service Menu switch the TV set OFF and then ON.

Model Setting

1	KV-29FX60A/D/E
2	KV-29FX60B
3	KV-29FX60U
4	KV-29FC60A/D/E
5	KV-29FC60B
6	KV-29FC60K
7	KV-29FC60R
8	KV-29FS60A/D/E
9	KV-29FS60B
10	KV-29FS60K
11	KV-29FS60R
12	KV-28/32FX60A/D/E
13	KV-28/32FX60B
14	KV-28/32FX60K
15	KV-28/32FX60R
16	KV-28/32FX60U
17	KV-29FS60A/D/E
18	KV-29FS60B

Fig.4-1

Basic setting

No	Descr.	Min	Max	Data
1	Sys.B/G	OFF	ON	ON
2	Sys.D/K	OFF	ON	ON
3	Sys.L	OFF	ON	ON
4	Sys I (UK)	OFF	ON	OFF
5	Sys I (IRL)	OFF	ON	OFF
6	Russian sound	OFF	ON	OFF
7	TXT Nod.option	1	4	3
8	simple PAT	OFF	ON	OFF
9	16:9 CRT	OFF	ON	OFF
10	Sub-woofer	OFF	ON	ON
11	Auto stand-by	OFF	ON	ON
12	comb-filter	OFF	ON	OFF
13	Auto YC det	OFF	ON	ON
14	Auto comb det	OFF	ON	OFF
15	AV2 Available	OFF	ON	ON
16	AV3 Available	OFF	ON	ON
17	AV4 Available	OFF	ON	OFF
18	AV3 Front & rear	OFF	ON	ON
19	SECAM Tape	OFF	ON	OFF

Fig.4-2

NOTE:
The above table is dependant on model, destination & size.

Backend

No	Descr.	Def	Min	Max	Data
1	R-on	ON	OFF	ON	ON
2	G-on	ON	OFF	ON	ON
3	B-on	ON	OFF	ON	ON
4	D-col	OFF	OFF	ON	ON
5	Color-axis	2	0	3	2
6	Contrast	63	0	63	63
7	Limit-Luv	3	0	3	3
8	Hue	31	0	63	31
9	Colour	31	0	63	28
10	CTI -Level	2	0	3	2
11	Brightness	31	0	63	31
12	Gamma	2	0	3	2
13	Sharpness	31	0	63	44
14	LTI-Level	0	0	3	0
15	R-Drive	41	0	63	40
16	BLK-Bottom	0	0	3	0
17	G-Drive	41	0	63	38
18	ABL-TH	0	0	3	0
19	B-Drive	41	0	63	21
20	ABL-Mode	2	0	3	2
21	Sub Bright	31	0	63	32
22	VM-Level	2	0	3	2
23	R-Cutoff	31	0	63	41
24	Preover	2	0	3	2
25	G-Cutoff	31	0	63	45
26	DPIC-Level	2	0	3	2
27	B-Cutoff	31	0	63	48
28	DC-Tran	1	0	3	1
29	Sub-Cont	7	0	15	7
30	LRGB2-Lvl	12	0	15	12
31	P-Abl	15	0	15	15
32	DL-Pass	OFF	OFF	ON	OFF
33	Sharp.Fo	ON	OFF	ON	ON
34	Aging-W	OFF	OFF	ON	OFF
35	Aging-B	OFF	OFF	ON	OFF
36	CB-offset1	7	0	15	7
37	CR-offset1	7	0	15	7
38	CB-offset2	7	0	15	7
39	CR-offset2	7	0	15	7
40	Sub Colour	0	-8	8	-1

Fig.4-3

Feature setting

No	Descr.	Min	Max	Data
1	PIP	OFF	ON	ON

Fig.4-4

Colour Decoder 1

No	Descr.	Def	Min	Max	Data
1	DelayLinMd	OFF	OFF	ON	OFF
2	Gain set	1	0	3	1
3	Y-Delay	7	0	15	7
4	Phase Time	0	0	3	0
5	Vid Ident Md	OFF	OFF	ON	OFF
6	Sync Mode	OFF	OFF	ON	OFF
7	Vid Ident Sw	ON	OFF	ON	ON
8	H-Output	OFF	OFF	ON	OFF
9	Enagating	OFF	OFF	ON	OFF
10	IF Circuit	ON	OFF	ON	ON
11	GP Delay	OFF	OFF	ON	OFF

Fig.4-5

Colour Decoder 2

No	Descr.	Def	Min	Max	Data
1	DelayLinMd	OFF	OFF	ON	OFF
2	Gain set	1	0	3	1
3	Y-Delay	7	0	15	7
4	Phase Time	0	0	3	0
5	Vid Ident Md	OFF	OFF	ON	OFF
6	Sync Mode	OFF	OFF	ON	OFF
7	Vid Ident Sw	ON	OFF	ON	ON
8	H-Output	OFF	OFF	ON	OFF
9	Enagating	OFF	OFF	ON	OFF
10	IF Circuit	ON	OFF	ON	ON
11	GP Delay	OFF	OFF	ON	OFF

Fig.4-6

Deflection

No	Descr.	Def	Min	Max	Data
1	V-Size	31	0	63	34
2	V-Position	31	0	63	21
3	V-Comp	1	0	3	1
4	V-Linear	7	0	15	7
5	S-Corr	7	0	15	8
6	H-Size	31	0	63	29
7	EW-DC	OFF	OFF	ON	OFF
8	Pin-Amp	31	0	63	36
9	Up-Cpin	31	0	63	35
10	M-Pin	2	0	3	2
11	Lo-Cpin	31	0	63	37
12	Trapezium	7	0	15	7
13	H-Position	31	0	63	25
14	AFC-Bow	7	0	15	7
15	AFC-Angle	7	0	15	9
16	Up-Vlin	0	0	15	0
17	Lo-Vlin	0	0	15	0

Fig.4-7

Dynamic Convergence

No	Descr.	Def	Min	Max	Data
1	Range	63	0	63	32
2	H Stat	33	0	63	33
3	H amp L	37	0	63	37
4	H amp R	36	0	63	36
5	Up Y	31	0	63	31
6	Low Y	33	0	63	33
7	Y Up L	30	0	63	30
8	Y Up R	30	0	63	30
9	Y Low L	31	0	63	31
10	Y Low R	30	0	63	30
11	Mbow Up L	31	0	63	31
12	Mbow Up R	32	0	63	32
13	Mbow Low L	32	0	63	32
14	Mbow Low R	32	0	63	32
15	V Stat	32	0	63	32
16	Linearity	128	0	255	104
17	H Centre	32	0	63	32
18	H Trap	32	0	63	32
19	Rotation	0	0	255	0
20	Focus Phase	128	0	255	128

Fig.4-8

Feature Low-End

No	Descr.	Def	Min	Max	Data
1	F.S.F.M	OFF	OFF	ON	OFF
2	G-Mode	OFF	OFF	ON	OFF
3	Picture Pos	0	0	3	0
4	Comp Mode	OFF	OFF	ON	OFF
5	CompSW	OFF	OFF	ON	OFF
6	Acqu.freq	OFF	OFF	ON	OFF
7	Still Pic	OFF	OFF	ON	OFF
8	Init	OFF	OFF	ON	OFF
9	Dis Feature	ON	OFF	ON	ON
10	Dis Vlimit	ON	OFF	ON	ON
11	Scr Fade	0	0	3	0
12	Hwe Delay	20	0	255	20
13	Auto Vshift	OFF	OFF	ON	OFF
14	Vwe Delay	0	0	127	0
15	SFR sw	OFF	OFF	ON	OFF
16	IPQ	0	0	3	0
17	D.Col Dec	OFF	OFF	ON	OFF
18	Blankfield	0	0	15	0
19	P1.5	OFF	OFF	ON	OFF
20	P1.4	OFF	OFF	ON	OFF
21	P1.3	OFF	OFF	ON	OFF
22	P1.2	OFF	OFF	ON	OFF
23	P1.1	OFF	OFF	ON	OFF
24	Set Vdba	OFF	OFF	ON	OFF
25	Set Sidep	ON	OFF	ON	ON
26	Set Hwe	OFF	OFF	ON	OFF
27	Set Clv	OFF	OFF	ON	OFF
28	Set Hddel	OFF	OFF	ON	OFFF
29	Set Hblnd	OFF	OFF	ON	OFF
30	Set Hre	ON	OFF	ON	ON
31	Set Hbda	ON	OFF	ON	ON
32	Set Hdav	ON	OFF	ON	ON
33	Vbdasta	0	0	255	0
34	Vsdasto	0	0	255	0
35	Msbhwesto	OFF	OFF	ON	OFF
36	Msbhwesta	OFF	OFF	ON	OFF
37	Msbvbdasto	OFF	OFF	ON	OFF
38	Msbvbdasta	OFF	OFF	ON	OFF
39	Hdavsta	40	0	255	40
40	Hdavsto	255	0	255	255

Feature Low-End(Cont.)

No	Descr.	Def	Min	Max	Data
41	Hbdasta	223	0	255	223
42	Hbdasto	222	0	255	222
43	Hresta	38	0	255	38
44	Hresto	202	0	255	202
45	Hblndsta	31	0	255	31
46	Hblndsto	30	0	255	30
47	MsbHblndsta	OFF	OFF	ON	OFF
48	MsbHblndsto	OFF	OFF	ON	OFF
49	Msb Hresto	ON	OFF	ON	ON
50	Msb Hresta	OFF	OFF	ON	OFF
51	Msbhbdasta	ON	OFF	ON	ON
52	Msbhbdasto	ON	OFF	ON	ON
53	Msbhdavsto	ON	OFF	ON	ON
54	Msbhdavsta	OFF	OFF	ON	OFF
55	Hddel	0	0	15	0
56	Clvsta	0	0	255	0
57	Clvsto	9	0	255	9
58	Hwesta	44	0	255	44
59	Hwesto	208	0	255	208
60	Ex-Thres	OFF	OFF	ON	OFF
61	Wes	ON	OFF	ON	OFF
62	Demo mode	ON	OFF	ON	OFF
63	Limerick NR	0	0	4	0
64	Nthr	0	0	255	2
65	Wval	200	0	255	200
66	Agc Ych	203	0	255	203
67	Agc Uvch	209	0	255	209
68	Aal-Bypass	OFF	OFF	ON	OFF
69	Stby Fr	OFF	OFF	ON	OFF
70	Lsb Agc-Uv	OFF	OFF	ON	OFF
71	Lsb Agc-Y	OFF	OFF	ON	OFF
72	Vcl cor	0	0	3	0
73	Ucl cor	0	0	3	0
74	Uv cor mode	0	0	3	0
75	Uvcl tau	3	0	3	3
76	Uvcol Lvl	0	0	3	0
77	Fil Mem	OFF	OFF	ON	OFF
78	Overl Thr	1	0	3	1
79	Y delay f	4	0	7	4
80	Dcti pdxsel	ON	OFF	ON	ON

Fig.4-9

Feature Low-End (Cont.)

No	Descr.	Def	Min	Max	Data
81	Dcti Thres	0	0	15	0
82	Dcti Gain	0	0	7	0
83	Dcti Super	ON	OFF	ON	ON
84	Dcti Fil	ON	OFF	ON	ON
85	Dcti Prot	ON	OFF	ON	ON
86	Dcti Sep	ON	OFF	ON	ON
87	Dcti Limit	2	0	3	2
88	Peak Beta	0	0	7	0
89	Peak Alpha	2	0	7	2
90	Peak Neg g	0	0	3	0
91	Peak Delta	0	0	3	0
92	Peak Tau	0	0	7	0
93	Peak Corth	0	0	15	0
94	Overlay V	0	0	15	0
95	Overlay U	0	0	15	0
96	Overlay Y	10	0	255	10
97	Sidep sta	240	0	255	240
98	Sidep sto	36	0	255	36
99	Y delay B	7	0	7	7
100	Invert UV	ON	OFF	ON	ON
101	Output Range	ON	OFF	ON	ON
102	Sidep Fdel	0	0	3	0

PIP

No	Descr.	Def	Min	Max	Data
1	Freeze	OFF	OFF	ON	OFF
2	Frame	ON	OFF	ON	ON
3	Pipon	ON	OFF	ON	OFF
4	Seldel	1	0	15	1
5	Mixdis	ON	OFF	ON	ON
6	H-Poshi	0	0	3	0
7	H-Pos	137	0	255	137
8	V-Pos	59	0	255	59
9	Y-Delay	0	0	7	0
10	V-Dec	OFF	OFF	ON	OFF
11	H-Dec	OFF	OFF	ON	OFF
12	Insvh	ON	OFF	ON	ON
13	Chrins	ON	OFF	ON	ON
14	Pmod	0	0	3	0
15	Imod	0	0	3	0
16	Clisw	ON	OFF	ON	ON
17	H side	4	0	15	4
18	Vsiisq	OFF	OFF	ON	OFF
19	Vsidel	0	0	31	0
20	Parasynd	ON	OFF	ON	ON
21	Vspisq	OFF	OFF	ON	OFF
22	Vspdel	10	0	31	10
23	Con	1	0	15	1
24	Fry	8	0	15	8
25	Frv	3	0	15	3
26	Fru	4	0	15	4
27	Sel Down	OFF	OFF	ON	OFF
28	Frwidv	1	0	3	1
29	Frwidh	2	0	7	2
30	Mat	4	0	7	4
31	Daconst	OFF	OFF	ON	OFF
32	Plltc	1	0	3	1
33	Dacontle	OFF	OFF	ON	OFF
34	Left	83	0	255	83
35	RightHi	1	0	3	1
36	Right	192	0	255	192
37	Up	46	0	255	46
38	Down	189	0	255	189

Fig.4-10

Sound

No	Descr.	Def	Min	Max	Data
1	Ref.Level	40	0	20	40
2	Auto-gain	ON	OFF	ON	ON
3	Ana-in	0	0	1	0
4	Corr-mute	ON	OFF	ON	ON
5	Clock out	ON	OFF	ON	ON
6	AM-gain	ON	OFF	ON	ON
7	Clip mode	0	0	2	0
8	SCART1 Vol	79	0	127	79
9	SCART2 Vol	79	0	127	79
10	SCART Pr	27	0	127	27
11	Izs1-pr	16	0	127	16
12	Izs2-pr	16	0	127	16
13	FM pr	27	0	127	27
14	BG Nic-pr	53	0	127	53
15	L Nic-pr	59	0	127	59
16	DK Nic-pr	53	0	127	53
17	I Nic-pr	97	0	127	97
18	Irl Nic-pr	97	0	127	97
19	AVC-Decay	2	0	8	2
20	Subw-vol	0	0	-127	0
21	Subw-freq	20	5	40	20
22	Subw-Hpuss	OFF	OFF	ON	OFF
23	Spat-stre	127	0	-1	127
24	Spat-Coeff	0	0	8	0
25	Bass offs	0	-3	3	0
26	Treble offs	0	-3	3	0
27	Loudn offs	0	0	9	0
28	Hp-voloffs	-2	-5	5	-2
29	M-S Limit	30	-128	127	30
30	M-B Limit	-30	-128	127	-30
31	S-M Limit	12	-128	127	12
32	S-B Limit	-20	-128	127	-20
33	B-M Limit	-12	-128	127	-12
34	B-S Limit	20	-128	127	20
35	Err.Max	40	0	255	40
36	Err.Min	14	0	255	18

Fig.4-11

Special Adjustment

No	Descr.	Min	Max	Data
1	RGB Level	0	7	0
2	RGB Gain	0	31	9
3	RGB PatLevel	0	7	7
4	RGB Patgain	0	31	31
5	RGB H-position	-10	10	-1
6	Extra Fw	0	255	255
7	EPG Chks Check	OFF	ON	ON
8	Slicer High	OFF	ON	ON
9	FCW Wide	OFF	ON	ON
10	High Pll	OFF	ON	OFF
11	Panic offset	0	2	0
12	Wide Mute	OFF	ON	ON

Fig.4-12

DEFLECTION SYSTEM ADJUSTMENT

1. Enter into the service mode and select ‘Deflection ’. The ‘Deflect ’ adjustment menu will be displayed.
2. Select and adjust each item to obtain the optimum image.

4-2.VOLUME ELECTRICAL ADJUSTMENTS

Sub Colour Adjustment

1. Input a PAL colour bar signal.
2. Connect an oscilloscope to CN5400 pin 5 on the C board.
3. Enter into the ‘SERVICE MODE’.
4. Choose ‘Backend’.
5. Adjust Sub Colour data so that the right sides of the waveforms are of equal height.

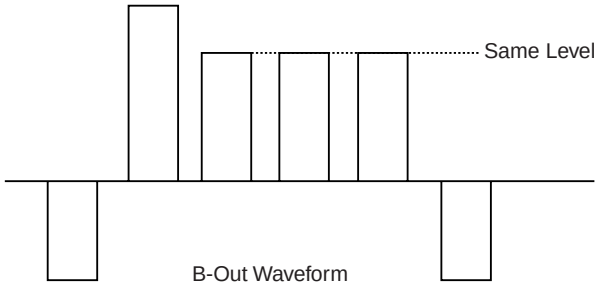

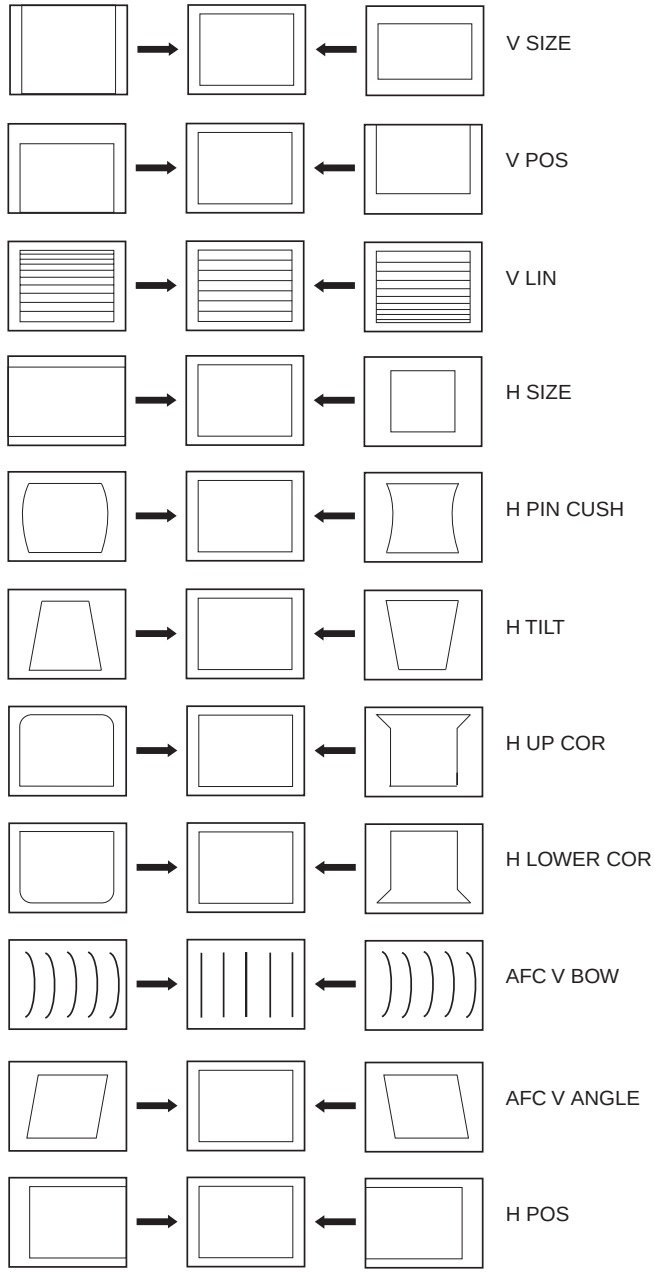

4-3. TEST MODE 2:

Is available by pressing ‘TEST’ button twice, OSD ‘TT’ appears. The functions described below are available by pressing the two numbers. To release the Test mode 2, press 0, 10, 20 ... twice or switch the TV set into Stand-by Mode. Pressing the two Local Control buttons (+ and -) during Power ON will also switch into ‘TT’ mode.
In ‘TT’ mode, it is possible to remove the Menu from the screen by pressing the Speaker Off button once. Pressing the Speaker OFF button a second time will cause the menu to reappear. The Function is kept even when the menu is not displayed !!.

00	Switch back to normal mode - ‘TT’ mode off
01	Set picture maximum
02	Set picture minimum
03	Set speaker/headphone Volume to 30%
04	Set speaker/headphone Volume to 50%
05	Set speaker/headphone Volume to 65%
06	Set speaker/headphone Volume to 80%
07	Ageing Mode
08	Shipping Condition
09	Language Reset
10	No function
11	Sub picture adjustment
12	Sub colour adjustment
13	Display software version and TV set configuration
14	Production Info Display
15	Picture Rotation
16	Picture level 50%
17	Audio mute on
18	No function
19	Sub brightness adjustment
20	See ‘TT10’
21	Destination A includes text settings, display TV status
22	Destination L includes text settings, display TV status
23	Destination E includes text settings, display TV status
24	Destination U includes text settings, display TV status
25	Destination D includes text settings, display TV status
26	Destination B includes text settings, display TV status
27	Destination K includes text settings, display TV status
28	Destination R includes text settings, display TV status
30	See ‘TT10’
31	Geometry Adjustment 1
32	Geometry Adjustment 2
33	Error monitor
34	No function
35	CRT 4:3 < > 16:9 ; Display TV status
36	Line 23 detection switch
37	Velocity Modulation (VM) test
38	No function
39	No function
40	See ‘TT10’

41	Screen mode check
42	Re initialise geometry
43	No function
44	No function
45	No function
46	Reserved for dealer commander
47	Re initialise NVM
48	Set NVM as non virgin
49	Set NVM as virgin
50	See ‘TT10’
51	Set Dolby volume to 90%
52	Dolby on left speaker only
53	Dolby on right speaker only
54	Dolby on left centre only
55	Dolby on surround speaker only
56 - 59	No function
60	See ‘TT10’
61	Service mode
62	Production mode
65	Reset error codes
68	Ignore errors on
69	Ignore errors off
70	See ‘TT10’
71 - 72	No function
73	Clear programs
74 - 79	No function
80	See ‘TT10’
81	PAP H adjustment left image
82	PAP H adjustment right image
83 - 86	No function
87	Personal ID reset
88	Parental Lock off
89	No function
90	See ‘TT10’

Memo

5-1 BLOCK DIAGRAMS (1)

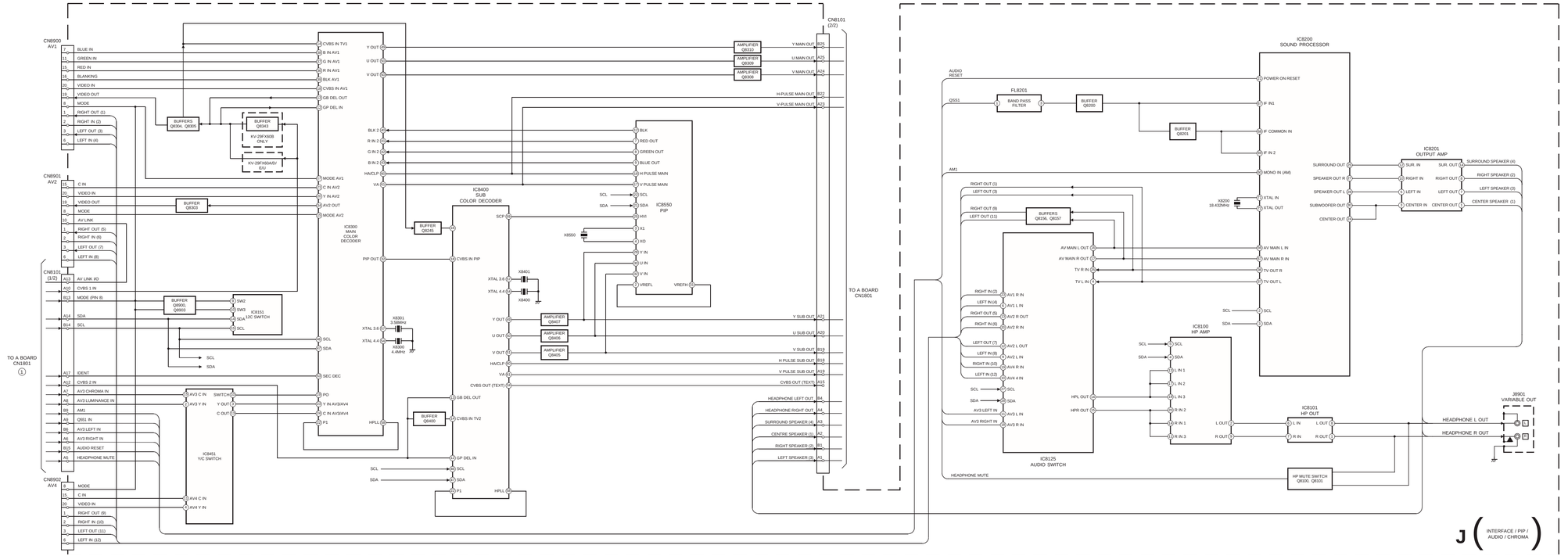

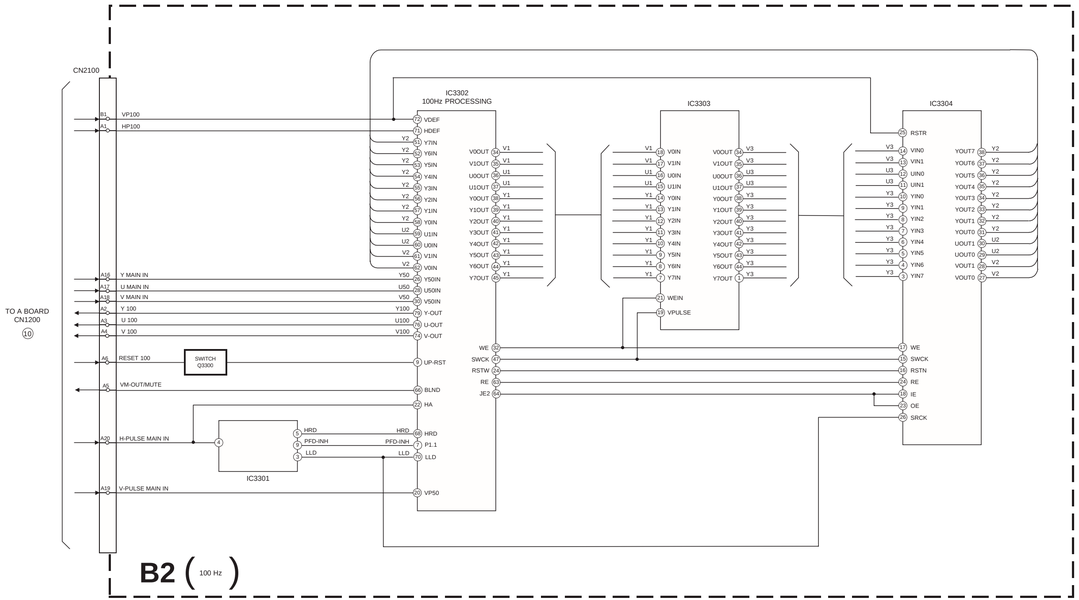
CN2100
IC3302
100Hz PROCESSING
IC3303
IC3304
TO A BOARD
CN1200
10
Y MAIN IN
U MAIN IN
V MAIN IN
Y 100
U 100
V 100
RESET 100
SWITCH
Q3300
VM-OUT/MUTE
H-PULSE MAIN IN
V-PULSE MAIN IN
IC3301
Y-OUT
U-OUT
V-OUT
UP-RST
BLND
HA
HRD
P1.1
LLD
VP50
WE
SWCK
RSTW
RSTN
RE
JE2
IE
OE
SRCK
WEIN
VPULSE
B2 (100 Hz)

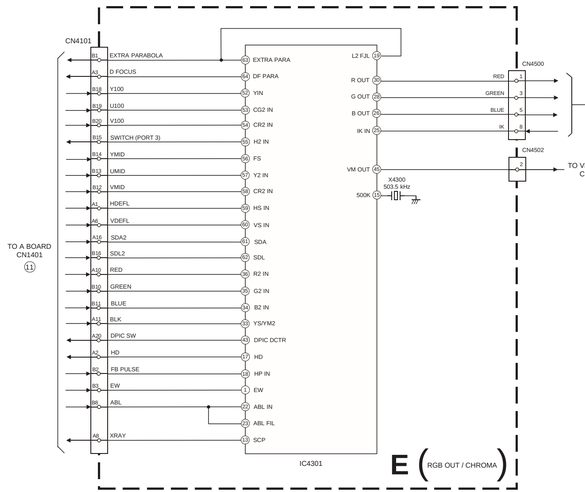
CN4101
TO A BOARD
CN1401
11
EXTRA PARABOLA
D FOCUS
Y100
U100
V100
SWITCH (PORT 3)
YMID
UMID
VMID
HDEFL
VDEFL
SDA2
SDL2
RED
GREEN
BLUE
BLK
DPIC SW
HD
FB PULSE
EW
ABL
XRAY
EXTRA PARA
DF PARA
YIN
CG2 IN
CR2 IN
H2 IN
FS
Y2 IN
CR2 IN
HS IN
VS IN
SDA
SDL
R2 IN
G2 IN
B2 IN
YS/YM2
DPIC DCTR
HD
HP IN
EW
ABL IN
ABL FIL
SCP
IC4301
L2 FJL
R OUT
G OUT
B OUT
IK IN
VM OUT
X4300
503.5 kHz
500K
CN4500
RED
GREEN
BLUE
IK
CN4502
TO VM BOARD
CN5402
9
E (RGB OUT / CHROMA)

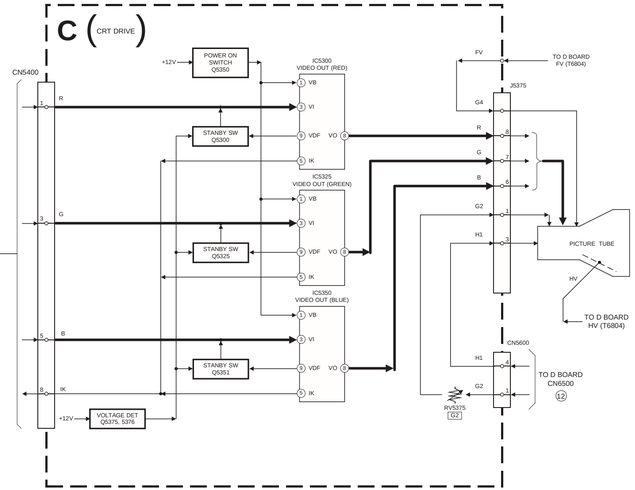
C (CRT DRIVE)
CN5400
+12V
POWER ON
SWITCH
Q5350
STANBY SW
Q5300
STANBY SW
Q5325
STANBY SW
Q5351
VOLTAGE DET
Q5375, 5376
IC5300
VIDEO OUT (RED)
IC5325
VIDEO OUT (GREEN)
IC5350
VIDEO OUT (BLUE)
VB
VI
VDF
IK
VO
R
G
B
IK
FV
TO D BOARD
FV (T6804)
J5375
G4
G2
H1
PICTURE TUBE
HV
TO D BOARD
HV (T6804)
CN5600
TO D BOARD
CN6500
12
RV5375
G2

5-1 BLOCK DIAGRAMS (3)

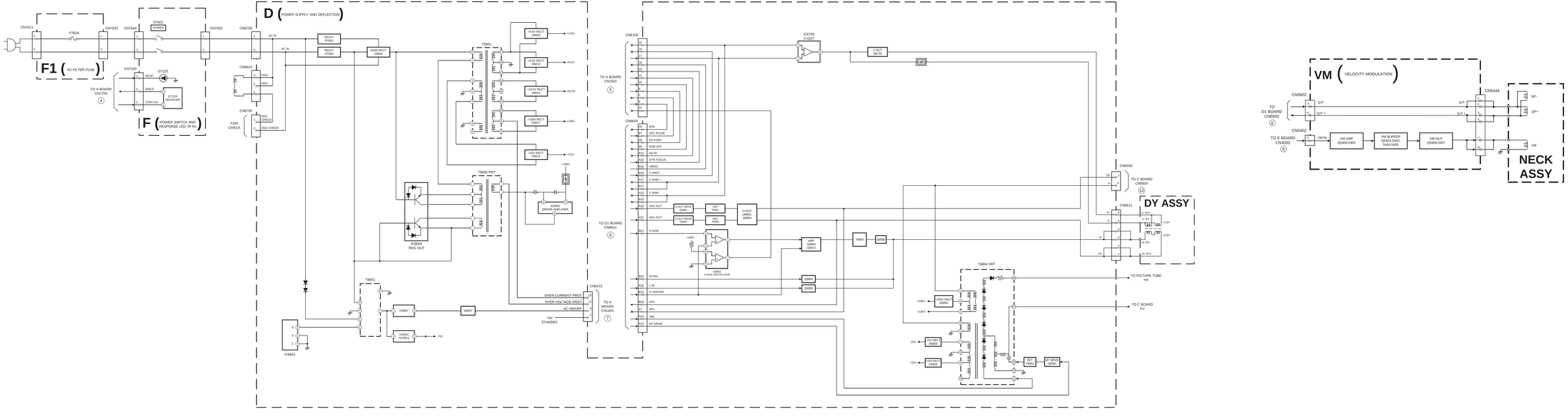

5-1 BLOCK DIAGRAMS (4)

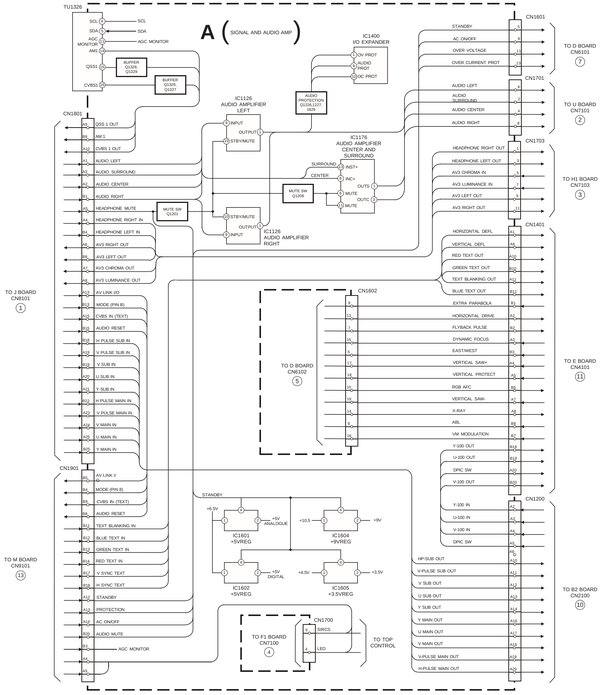

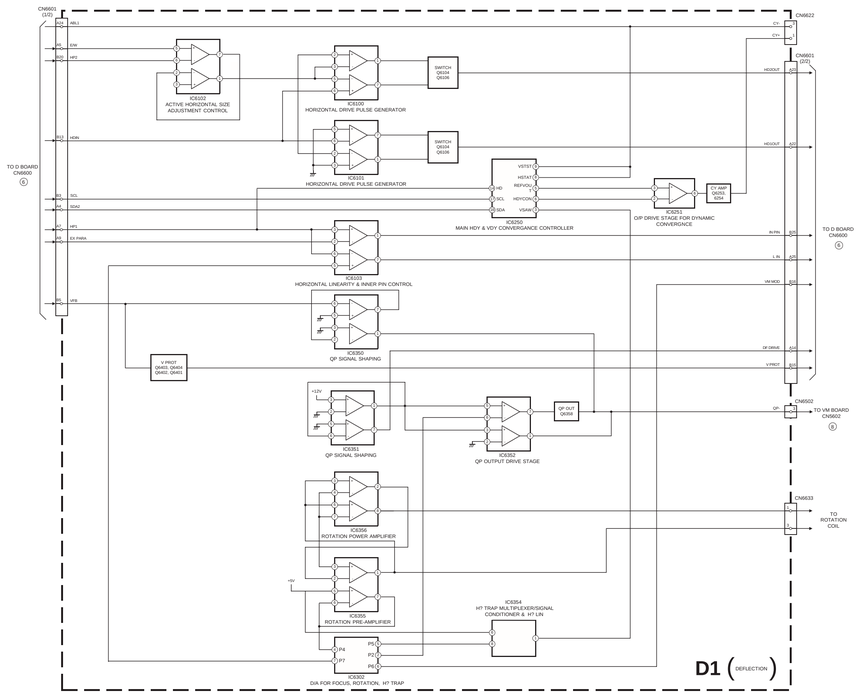

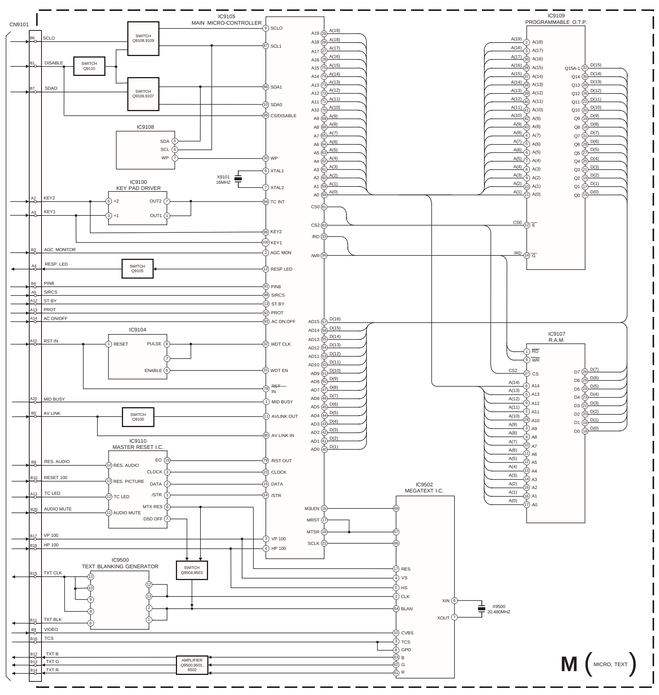

5-2. CIRCUIT BOARD LOCATION

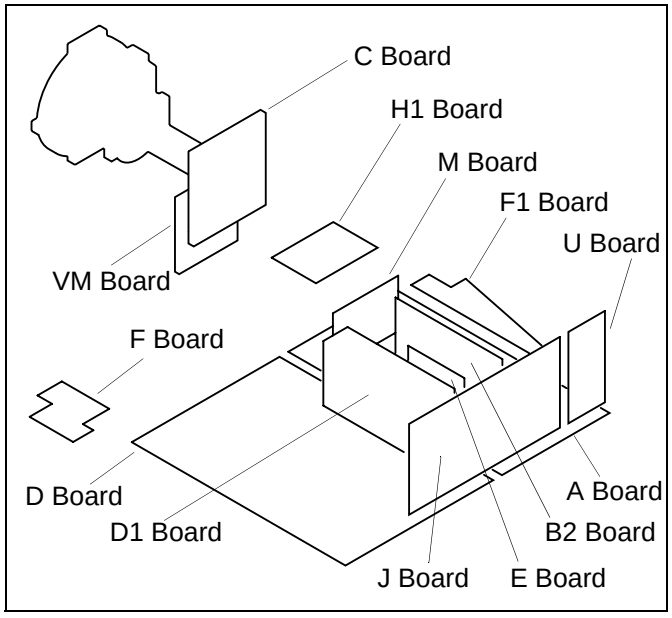

5-3. SCHEMATIC DIAGRAMS AND PRINTED WIRING BOARDS

Note :

- All capacitors are in µF unless otherwise noted.
- pF : µµF 50WV or less are not indicated except for electrolytic types.
- Indication of resistance, which does not have one for rating electrical power, is as follows.

Pitch : 5mm
Electrical power rating : 1/4W

- Chip resistors are 1/10W
- All resistors are in ohms.
  k = 1000 ohms, M = 1000,000 ohms
- : nonflammable resistor.
- : fusible resistor.
- : internal component.
- : panel designation or adjustment for repair.
- All variable and adjustable resistors have characteristic curve B, unless otherwise noted.
- All voltages are in Volts.
- Readings are taken with a 10Mohm digital mutimeter.
- Readings are taken with a color bar input signal.
- Voltage variations may be noted due to normal production tolerences.
- : B + bus.
- : B - bus.
- : RF signal path.
- : earth - ground.
- : earth - chassis.

Reference Information

RESISTOR	**RN**	: METAL FILM
	RC	: SOLID
	FPRD	: NON FLAMMABLE CARBON
	FUSE	: NON FLAMMABLE FUSIBLE
	RS	: NON FLAMMABLE METAL OXIDE
	RB	: NON FLAMMABLE CEMENT
	RW	: NON FLAMMABLE WIREWOUND
		: ADJUSTMENT RESISTOR
COIL	**LF-8L**	: MICRO INDUCTOR
CAPACITOR	**TA**	: TANTALUM
	PS	: STYROL
	PP	: POLYPROPYLENE
	PT	: MYLAR
	MPS	: METALIZED POLYESTER
	MPP	: METALIZED POLYPROPYLENE
	ALB	: BIPOLAR
	ALT	: HIGH TEMPERATURE
	ALR	: HIGH RIPPLE

Note : The components identified by shading and marked ⚠ are critical for safety. Replace only with the part numbers specified in the parts list.

Note : Les composants identifiés par une trame et par une marque ⚠ sont d'une importance critique pour la sécurité. Ne les remplacer que par des pièces de numéro spécifié. specified.

A BOARD * MARK

Ref	29FX60A	29FX60B	29FX60D	29FX60E	29FX60U
TU1326	TUNER/VIF (AEP)	TUNER/VIF (FR)	TUNER/VIF (AEP)	TUNER/VIF (AEP)	TUNER/VIF (UK)

J BOARD * MARK

Ref	29FX60A	29FX60B	29FX60D	29FX60E	29FX60U
Q8311	-	2SC2412K-T-146-R	-	-	-
R8346	SHORT 0	-	SHORT 0	SHORT 0	SHORT 0
R8347	-	100	-	-	-
R8348	-	SHORT 0	-	-	-

A BOARD

IC		DIODE	
IC1126	F - 6	D1100	A - 2
IC1151	F - 5	D1101	B - 2
IC1176	G - 15	D1102	B - 2
IC1400	B - 5	D1103	B - 4
IC1601	C - 3	D1401	E - 4
IC1602	B - 3	D1402	D - 5
IC1603	A - 11	D1403	D - 4
IC1604	D - 3	D1404	D - 5
IC1605	F - 3	D1626	B - 6
TRANSISTOR		D1627	C - 5
Q1100	A - 2	D1629	E - 1
Q1201	D - 6		
Q1202	E - 6		
Q1203	F - 9		
Q1204	F - 9		
Q1226	G - 9		
Q1227	G - 9		
Q1326	E - 11		
Q1327	E - 11		
Q1328	E - 10		
Q1329	E - 10		
Q1400	D - 4		
Q1626	B - 5		

C BOARD

IC	
IC5300	B - 6
IC5325	C - 3
IC5350	C - 1
TRANSISTOR	
Q5300	B - 6
Q5325	B - 5
Q5350	A - 1
Q5351	C - 2
Q5375	A - 4
Q5376	A - 4
DIODE	
D5300	B - 6
D5302	C - 5
D5325	B - 4
D5326	B - 4
D5327	C - 4
D5350	B - 2
D5351	B - 1
D5353	C - 1
D5375	A - 5
D5376	A - 5
D5377	A - 1
D5378	B - 1
D5379	E - 5
D5380	E - 5
D5381	F - 2

D BOARD

IC		D6613	D - 12
IC6600	F - 9	D6615	C - 12
IC6604	H - 11	D6616	D - 9
IC6651	G - 13	D6617	D - 8
IC6652	A - 7	D6618	B - 11
IC6653	A - 9	D6619	B - 8
IC6654	D - 12	D6620	B - 9
IC6667	E - 14	D6621	B - 12
IC6700	D - 6	D6623	E - 8
IC6801	A - 3	D6624	B - 13
TRANSISTOR		D6625	A - 12
Q6600	J - 6	D6627	A - 10
Q6602	G - 9	D6628	A - 13
Q6603	G - 8	D6629	B - 12
Q6605	D - 12	D6651	I - 13
Q6606	A - 13	D6652	H - 13
Q6607	E - 8	D6653	H - 13
Q6651	E - 13	D6654	G - 12
Q6652	E - 14	D6655	G - 13
Q6667	E - 13	D6656	E - 13
Q6676	D - 13	D6658	H - 13
Q6677	D - 14	D6659	F - 13
Q6678	D - 13	D6676	C - 13
Q6679	C - 13	D6677	C - 13
Q6680	C - 13	D6678	C - 13
Q6681	D - 13	D6679	D - 13
Q6700	C - 6	D6681	E - 13
Q6801	H - 2	D6700	C - 5
Q6802	E - 6	D6701	H - 2
Q6803	F - 2	D6803	B - 3
Q6804	D - 5	D6804	C - 3
Q6805	E - 13	D6805	G - 3
Q6806	D - 3	D6806	H - 3
Q6807	B - 13	D6807	G - 7
Q6809	A - 2	D6808	G - 8
Q6810	A - 2	D6809	B - 13
Q6851	I - 2	D6811	D - 3
DIODE		D6812	B - 2
D6600	J - 7	D6813	B - 2
D6601	J - 7	D6851	H - 2
D6602	J - 6	D6852	1 - 2
D6603	D - 12		
D6604	I - 11		
D6610	C - 12		

D1 BOARD

IC		Q6350	E - 8
IC6100	C - 9	Q6351	E - 3
IC6101	C - 12	Q6352	D - 3
IC6102	D - 11	Q6353	C - 2
IC6103	G - 12	Q6354	C - 2
IC6250	D - 8	Q6356	G - 4
IC6251	C - 8	Q6258	B - 2
IC6302	D - 5	Q6401	F - 7
IC6350	D - 3	Q6402	G - 6
IC6351	G - 3	Q6403	F - 5
IC6352	G - 1	Q6404	G - 6
IC6353	E - 5	Q6455	C - 8
IC6354	C - 5	Q6465	B - 5
IC6355	A - 5	**DIODE**	
IC6356	A - 6	D6100	D - 12
TRANSISTOR		D6101	E - 12
Q6100	D - 11	D6102	D - 10
Q6101	C - 11	D6104	E - 9
Q6102	C - 12	D6105	E - 9
Q6104	C - 9	D6106	E - 8
Q6105	B - 11	D6108	F - 11
Q6106	C - 9	D6127	D - 6
Q6107	E - 11	D6128	E - 6
Q6108	B - 10	D6129	D - 8
Q6110	C - 8	D6198	D - 8
Q6118	G - 10	D6253	B - 8
Q6119	E - 8	D6254	B - 7
Q6120	E - 9	D6350	F - 4
Q6122	E - 9	D6351	F - 4
Q6123	E - 12	D6352	E - 1
Q6125	H - 11	D6353	C - 2
Q6126	H - 11	D6354	D - 2
Q6127	E - 6	D6355	E - 3
Q6128	F - 12	D6358	B - 2
Q6130	H - 11	D6359	B - 3
Q6131	G - 12	D6401	F - 7
Q6201	F - 10	D6402	F - 6
Q6202	F - 10	D6403	A - 5
Q6250	E - 8	D6404	A - 4
Q6251	E - 8	D6405	A - 5
Q6252	B - 10		
Q6253	B - 11		
Q6254	C - 2		

J BOARD

IC	
IC8100	F - 15
IC8101	F - 15
IC8125	F - 14
IC8151	D - 22
IC8201	E - 24
IC8202	D - 23
IC8300	E - 19
IC8400	C - 22
IC8451	A - 15
IC8550	B - 19
IC8601	D - 20
IC8602	E - 20
IC8603	A - 23
IC8604	A - 21

TRANSISTOR	
Q8200	E - 23
Q8201	E - 24
Q8202	E - 23
Q8303	C - 19
Q8304	C - 20
Q8305	D - 20
Q8307	D - 18
Q8308	E - 18
Q8309	E - 18
Q8310	D - 18
Q8311	C - 20
Q8343	F - 19
Q8400	B - 22
Q8401	C - 20
Q8403	C - 22
Q8404	C - 22
Q8405	C - 20
Q8406	C - 20
Q8407	C - 20
Q8425	A - 22
Q8450	A - 15
Q8453	A - 15
Q8456	A - 15
Q8459	B - 15
Q8461	B - 15
Q8900	D - 16
Q8901	C - 17
Q8903	D - 16

DIODE	
D8125	F - 12
D8126	F - 12
D8127	F - 11
D8128	F - 11
D8129	E - 12
D8130	E - 12
D8131	E - 11
D8200	D - 2
D8201	D - 2
D8202	E - 10
D8203	D - 10
D8432	B - 4
D8450	F - 1
D8451	F - 1
D8550	C - 20
D8900	C - 12
D8902	C - 11
D8903	C - 11
D8904	B - 11
D8905	B - 12
D8906	B - 12
D8907	C - 10
D8908	C - 10
D8909	C - 11
D8910	B - 11
D8911	C - 10
D8912	C - 9
D8913	C - 10
D8914	B - 10
D8915	C - 9
D8922	D - 16
D8923	D - 16

M BOARD

IC	
IC9100	C - 5
IC9104	D - 5
IC9105	E - 6
IC9107	E - 5
IC9108	C - 6
IC9109	F - 5
IC9110	C - 5
IC9500	A - 1
IC9502	B - 6

TRANSISTOR	
Q9100	D - 3
Q9101	C - 3
Q9102	D - 3
Q9103	D - 3
Q9105	D - 1
Q9106	C - 2
Q9107	C - 2
Q9108	C - 2
Q9109	B - 5
Q9110	C - 2
Q9500	B - 1
Q9501	B - 2
Q9502	C - 2
Q9503	E - 3
Q9504	A - 1

DIODE	
D9104	D - 3
D9107	A - 3
D9108	C - 1
D9109	C - 1
D9110	C - 2
D9111	C - 1

A [SIGNAL AND AUDIO AMP]

J [INTERFACE / PIP / AUDIO / CHROMA]

U [AUDIO INTERFACE / OUTPUT]

H1 [AV3 INPUT]

D [POWER SUPPLY AND DEFLECTION]

D1 [DEFLECTION]

F [POWER SWITCH AND RESPONSE LED, IR Rx]

M [MICRO, TEXT]

E [RGB OUT / CHROMA]

C [CRT DRIVE]

B2 [100 Hz]

F1 [AC FILTER FUSE]

VM [VELOCITY MODULATION]

BLOCK DIAGRAM (1)

BLOCK DIAGRAM (2)

BLOCK DIAGRAM (3)

BLOCK DIAGRAM (4)

SECTION 5

DIAGRAMS

VM Board

B2 Board <Conductor Side>

B2 Board <Component Side>

D1 Board

M Board <Conductor Side>

M Board <Component Side>

H1 Board <Conductor Side>

F1 Board <Conductor Side>

F1 Board <Component Side>

D Board

E Board

C Board

J Board <Conductor Side>

J Board <Component Side>

U Board <Conductor Side>

U Board <Component Side>

A Board <Conductor Side>

A Board <Component Side>

E Board <Conductor Side>

E Board <Component Side>

H1 Board <Component Side>

Waveforms A Board

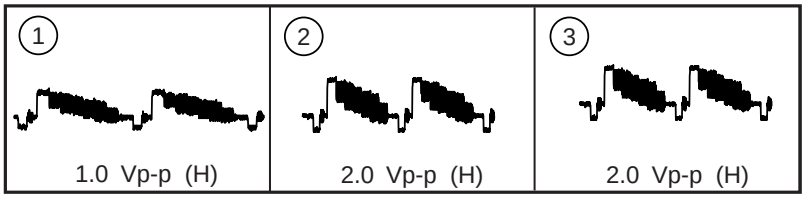

Waveforms D Board

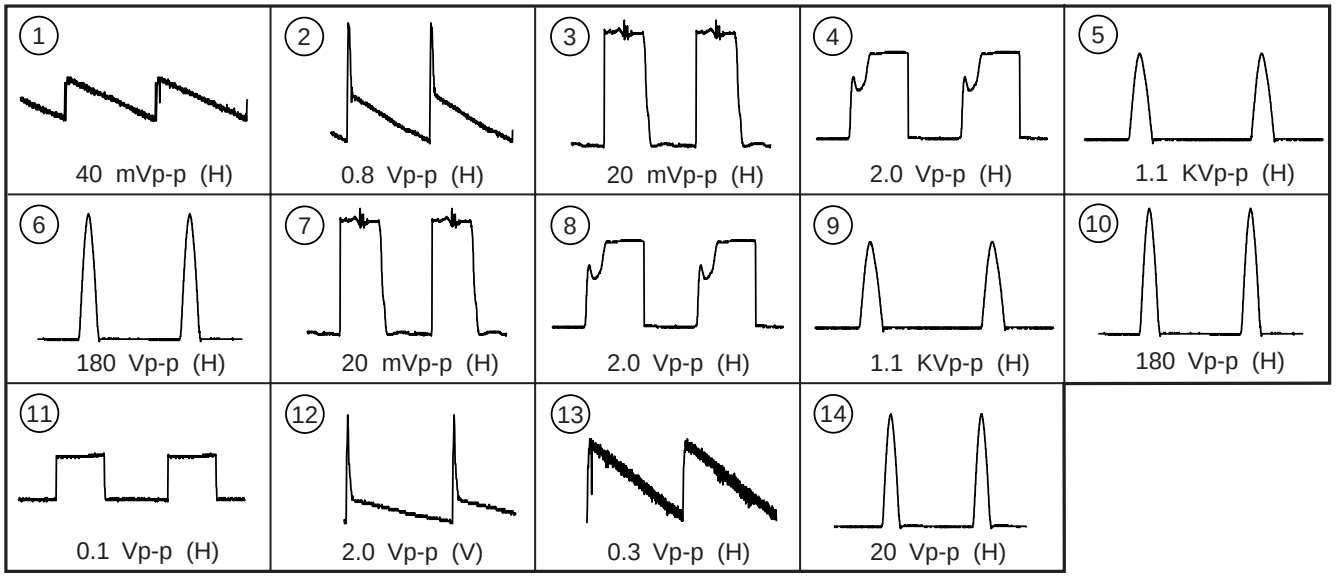

Waveforms J1(1/2) Board

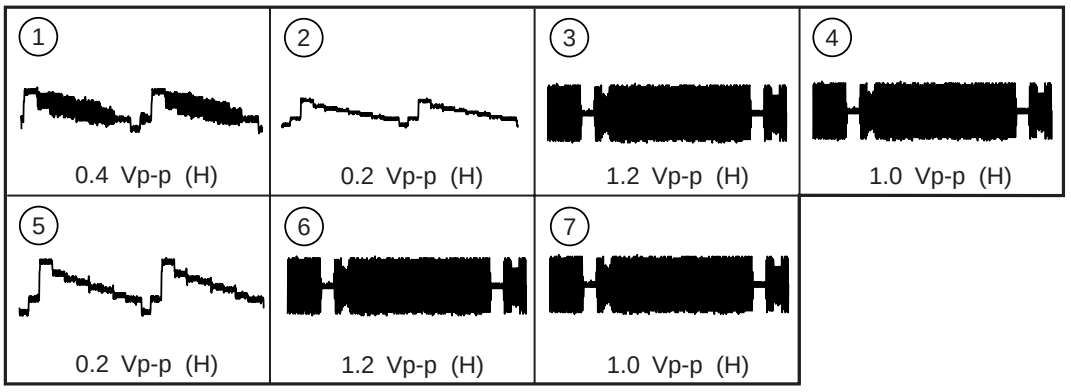

Waveforms C Board

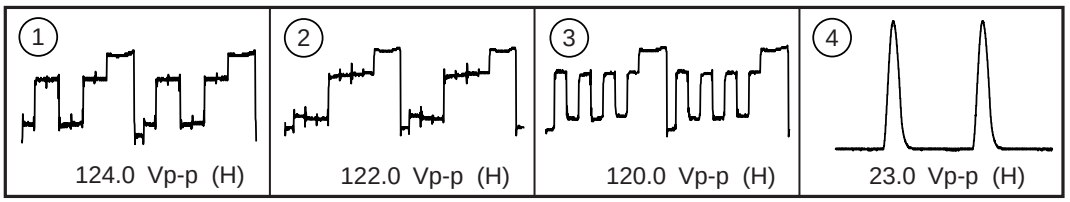

5-4 SEMICONDUCTORS

BA7046F
BA7046F-T1
LM393PS-E20
MB3793-42NF
MB3793-42NF-ER
NJM2240M
NJM2240M(TE2)
NJM3404AD

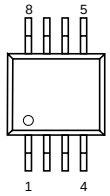

(TOP VIEW)

CXA1855Q-T6

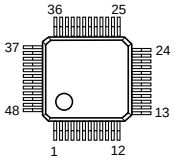

(TOP VIEW)

CXA1875AM-T4
HE4094BT
MC14052BDR2
MC74F157ADR2
SN74LS221D
74HCT4046AD/S470

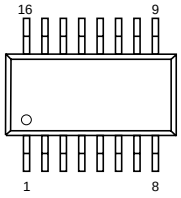

(TOP VIEW)

CXD2053S
TDA4780/V3

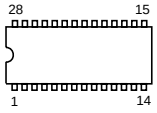

(TOP VIEW)

KA78R05TU
KA78R09TU
KA78R33TU

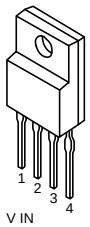

1 : V IN
2 : V OUT
3 : GND
4 : ON/OFF CONTROL

LM393D
M5216P
M24C32-BN6
ST24C16FB6
TDA2822M
UPC393C

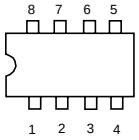

LM78L05ACZ
LM78L12ACZ
L78L05ACZ-AP
L78L12ACZ-AP

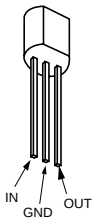

MB3793-42PNF-ER

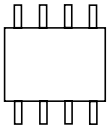

MSP3410D-QA-B4
SAA7185WP
SDA5273P-C134-GEG
SDA5275

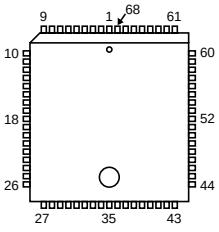

(TOP VIEW)

M27C800-100K1

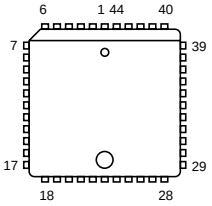

(TOP VIEW)

PC123F2
PC123FY2

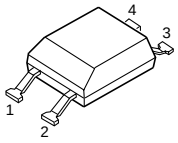

SBX1981-51

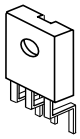

SDA9361

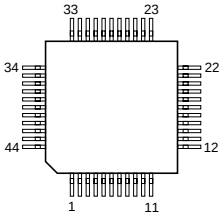

STV9379

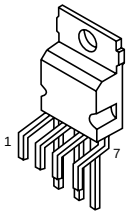

SAB-C161R1-LM

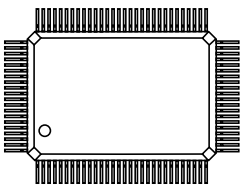

TC55257DFTL-70V-EL

TDA7309D013TR

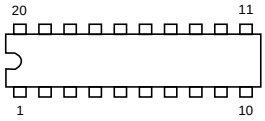

(TOP VIEW)

SDA9288X-B121
TDA9143/N2
TDA9144/N2
TDA9170T

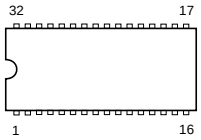

(TOP VIEW)

TDA9320H-N1-518

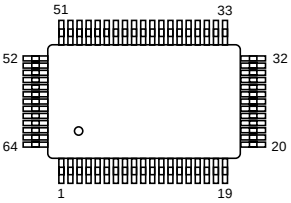

(TOP VIEW)

TEA6422DT
LM393N

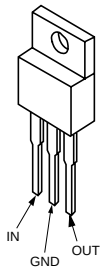

TOP209P

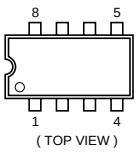

(TOP VIEW)

U2860B-BFPG3
74LVC08D

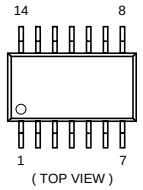

BC546B
BC556B

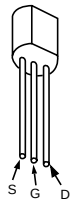

BF199
BF199-AMMO

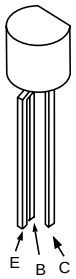

BF421-AMMO

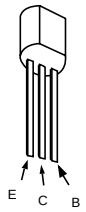

BF87-127

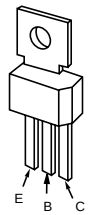

IMZ1A-T109

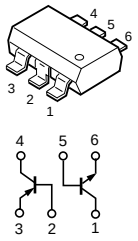

IRF614
IRF620

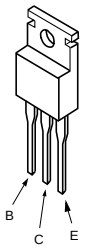

DTA144EK
DTA144EK-T146
DTC114EK
DTC114YKA-T146
DTC123EK
DTC123EK-T146
DTC124EKA-T146

DTC144EK
DTC144EK-T146
2SA1037K-T-146-R
2SA1162-G
2SC2412K-QR
2SC2412K-T-146-R

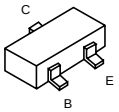

DTA144ESA
DTA144ESA-TP
DTC114ESA-TP
DTC144ESA-TP
2SA1175-HFE
2SA733-K

2SA933AS-RT
2SA933AS-QRT
2SA933S-RT
2SC1740S-RT
2SC2785-HFE

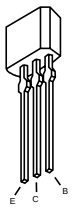

2SA1837

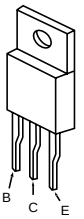

2SC2500-B
2SC2551-O
2SC2551O-TPE2

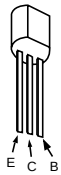

2SC2688-LK
2SC3840K

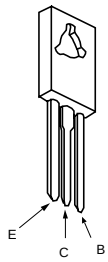

2SC3997CA

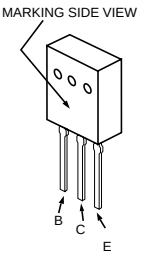

2SC4793

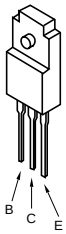

2SD2396H

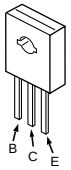

DAN202K
DAN202K-T-146

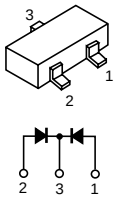

DAP202K
DAP202K-T-146

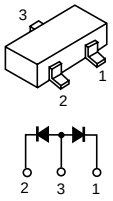

DA204K
DA204K-T-146

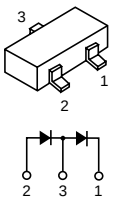

D1NL20-TA
D1NL20U-TR
D1N54-TR
EGP20G
EL1Z
GP08D
GP08DPKG23
R2K-V1

RGP02-20EG23
RGP10GPKG23
RGP15GPKG23
S2LA20F
1SS133T-77
1SS83
1SS83TD

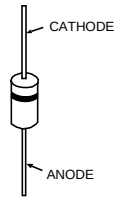

D10SC4M
D10SC6M

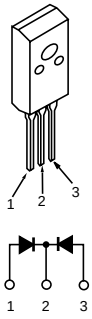

D4SB60L
D4SB60L-F
RBA-402L

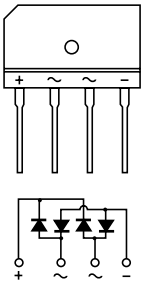

ESAC39M-06C
ESAC39M-06CF38

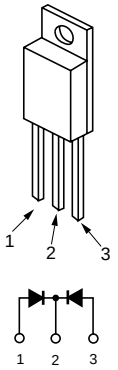

UF4005PKG23

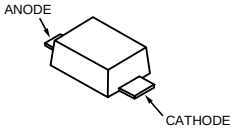

ERA38-06TP1
ERA82-004TP1
GP08DPKG23
MTZJ-T-77-12
MTZJ-T-77-15
MTZJ-T-77-2.2B
MTZJ-T-77-22
MTZJ-T-77-33C
MTZJ-T-77-3.6B
MTZJ-T-77-4.7B
MTZJ-T-77-5.6B
MTZJ-T-77-6.8
MTZJ-T-77-7.5B
MTZJ-T-77-9.1
MTZJ-33C
RD5.6ESB2
RD9.1ESB2
PGKE200AG23
1SS119-25
1SS119-25TD

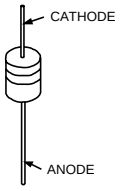

ERC04-06SE

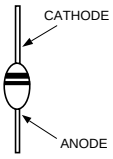

ERD08M-15

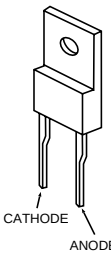

MA3033-L
MA3033L-TX
MA3056M-TX
MA3062M-TX
MA3030-H-(TX)

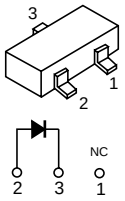

MA3051L-TX

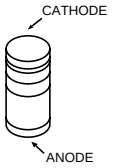

MA73-TX

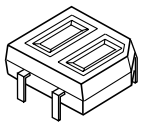

RD12SB2
UDZ-TE-17-6.2B
UDZ-TE-17-6.8B
UDZ-TE-12B

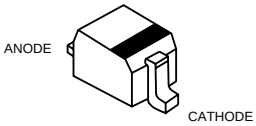

5-5. IC BLOCK DIAGRAMS

D BOARD IC6700 STV 9379

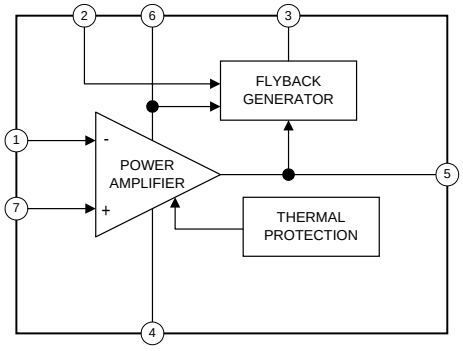

J BOARD IC8101 TDA2822D

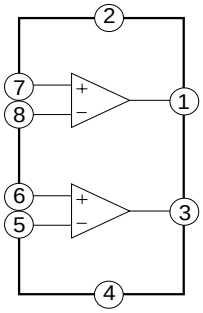

E BOARD IC4301 CXA2100Q-TL

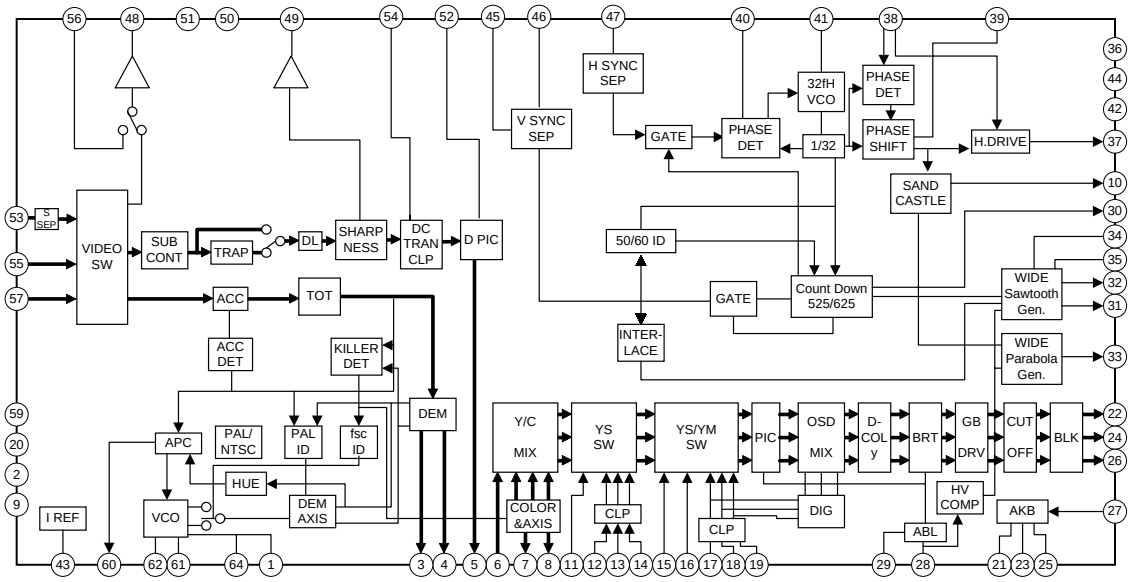

J BOARD IC8200 MSP3410D-QA-B4

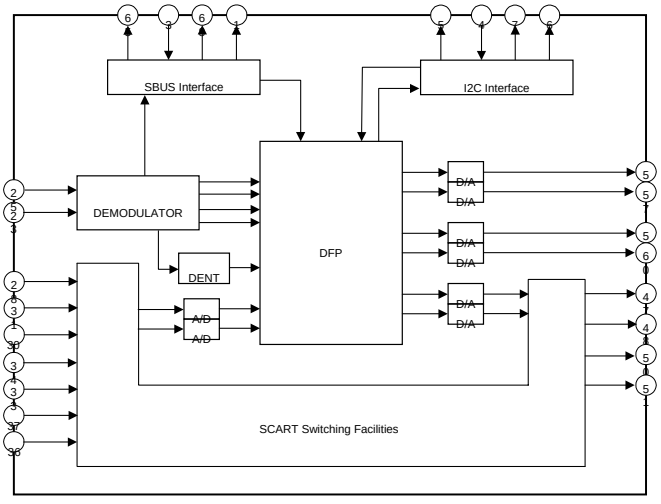

SECTION 6
EXPLODED VIEWS

NOTE :

- Items with no part number and no description are not stocked because they are seldom required for routine service.
- The construction parts of an assembled part are indicated with a collation number in the remarks column.
- Items marked " * " are not stocked since they are seldom required for routine service. Some delay should be anticipated when ordering these items.

The components identified by shading and marked ⚠ are critical for safety
Replace only with the part number specified.

6-1. CHASSIS

NOTE :
ONLY ONE WOOFER ASSEMBLY FITTED

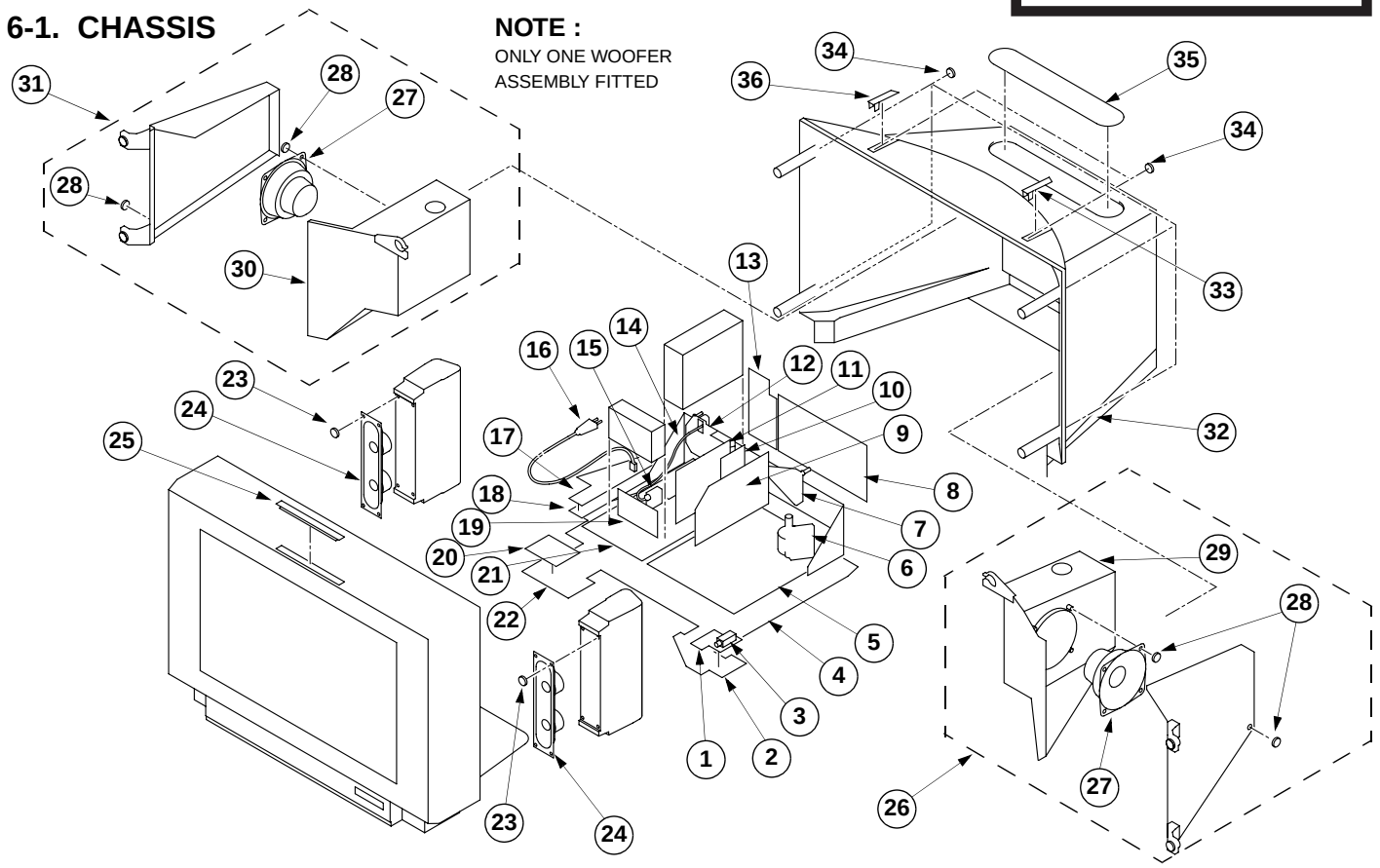

REF. NO.		PART.NO	DESCRIPTION	REMARK
1		*A-1624-073-A	F BOARD, COMPLETE	
2		*4-204-551-01	BRACKET, F	
3	⚠	1-571-433-21	SWITCH, PUSH (AC POWER)	
4		*1-204-549-01	BRACKET, MAIN	
5		*A-1640-318-A	D BOARD (29"), COMPLETE	
6	⚠	1-453-272-11	TRANSFORMER ASSY, FLYBACK (NX-4512/U2B4)	
7		*4-204-476-01	BRACKET, J1	
8		*A-1651-098-A	J BOARD, COMPLETE (KV-29FX60A/29FX60D/29FX60E/29FX60U)	
		*A-1651-103-A	J BOARD, COMPLETE (KV-29FX60B)	
9		*A-1640-320-A	D1 BOARD, COMPLETE	
10		*A-1640-319-A	E BOARD, COMPLETE	
11		*A-1620-111-A	B2 BOARD, COMPLETE	
12		*4-204-477-01	BRACKET, J2	
13		*A-1648-015-A	U BOARD, COMPLETE	
14		1-790-082-11	CABLE, RF	
15		1-693-338-11	TUNER/VIF (AEP) (KV-29FX60A/29FX60D/29FX60E)	
		1-693-340-11	TUNER/VIF (FR) (KV-29FX60B)	
		1-693-339-11	TUNER/VIF (UK) (KV-29FX60U)	
16	⚠	1-574-062-61	CORD, POWER (WITH CONNECTOR) (KV-29FX60A/29FX60B/29FX60D/29FX60E)	
	⚠	1-590-762-21	CORD, POWER (WITH UK PLUG) (KV-29FX60U)	
17		*A-1624-074-A	F1 BOARD, COMPLETE	
18		*4-204-552-01	BRACKET, F1	
19		*A-1634-046-A	M BOARD, COMPLETE	
20		*A-1646-170-A	H1 BOARD, COMPLETE	
21		*A-1630-974-A	A BOARD, COMPLETE (KV-29FX60A/29FX60D/29FX60E)	
		*A-1630-986-A	A BOARD, COMPLETE (KV-29FX60B)	
		*A-1630-987-A	A BOARD, COMPLETE (KV-29FX60U)	
22		*4-204-550-01	BRACKET, H	
23		4-039-358-01	SCREW (4X16), (+) BV TAPPING	
24		1-529-153-11	SPEAKER (4.8X20CM)	
25		1-771-599-11	SWITCH, ARRAY	
26		A-1678-188-A	WOOFER (R) ASSY	27-29
27		1-529-144-11	SPEAKER (13CM)	
28		4-039-355-11	SCREW (4X12), (+) BV TAPPING	
29		*A-1678-158-A	WOOFER (R) ASSY, SP FX	
30		*A-1678-157-A	WOOFER (L) ASSY, SP FX	
31		A-1678-150-A	WOOFER (L) ASSY	27,28,30
32		4-204-508-01	COVER, REAR	
33		4-204-460-01	COVER, SCREW (LEFT)	
34		4-302-404-03	SCREW (WASHER HEAD) (+P 4X16)	
35		*4-204-458-01	COVER, PORT	
36		4-039-461-01	COVER, SCREW (RIGHT)	

6-2. PICTURE TUBE

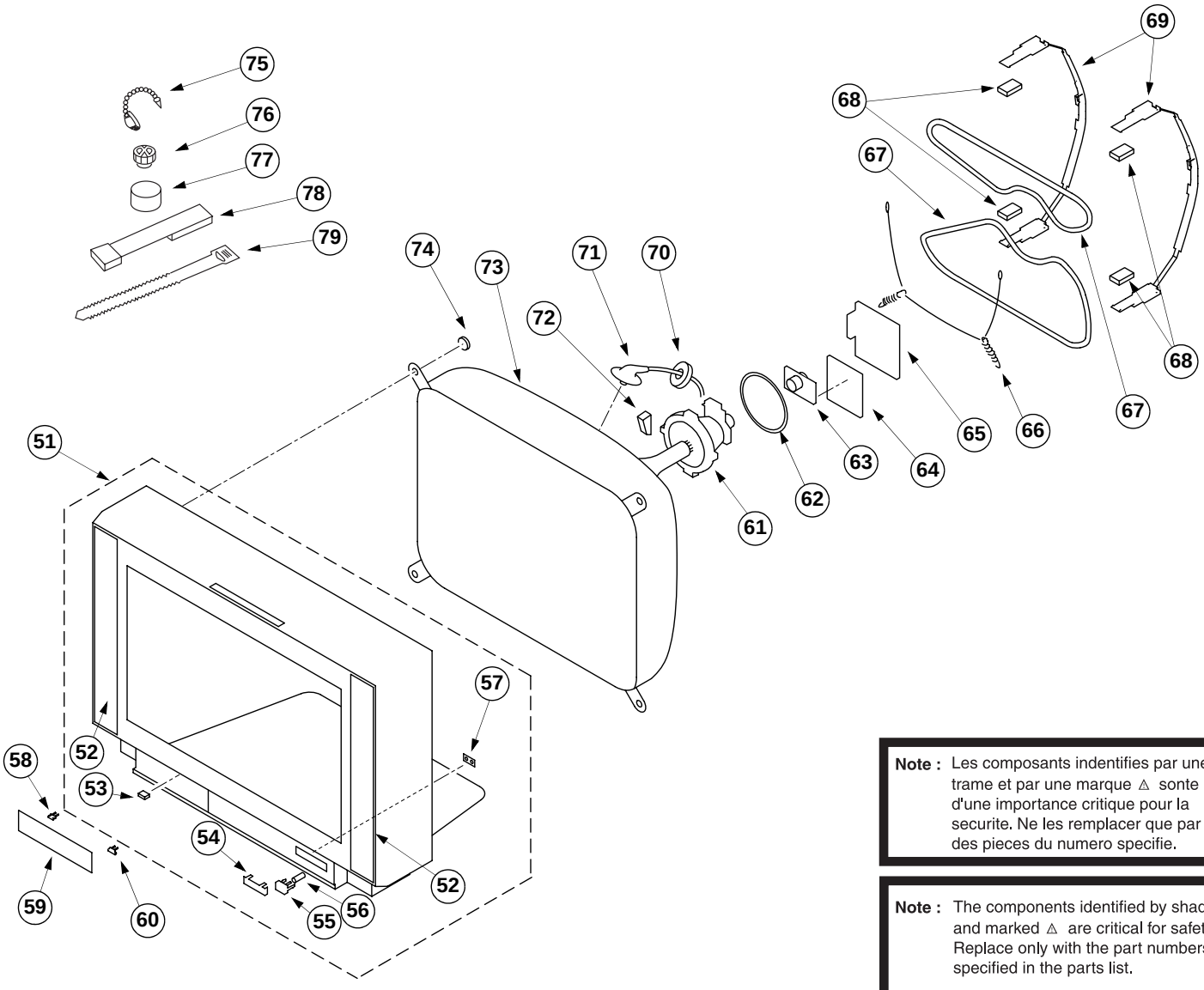

Note : Les composants indentifies par une trame et par une marque ⚠ sonte d'une importance critique pour la securite. Ne les remplacer que par des pieces du numero specifie.

Note : The components identified by shading and marked ⚠ are critical for safety. Replace only with the part numbers specified in the parts list.

REF. NO.		PART.NO	DESCRIPTION	REMARK
51		X-4200-423-1	BEZNET ASSY	52-57
52		4-204-473-01	GRILLE, SPEAKER	
53		4-042-192-01	CATCHER, PUSH	
54		4-204-492-01	WINDOW, ORNAMENTAL	
55		4-204-438-01	BUTTON, POWER	
56		4-202-964-11	SPRING	
57		4-204-439-01	GUIDE, LIGHT	
58		4-202-555-01	SHAFT, DOOR	
59		4-204-435-01	DOOR (KV-29FX60A/29FX60D)	
		4-204-435-11	DOOR (KV-29FX60B/29FX60E/29FX60U)	
60		4-045-250-01	DAMPER	
61	⚠	8-451-504-11	DEFLECTION YOKE Y29RSC-M	
62		1-452-896-11	COIL, NA ROTATION (RT200)	
63	⚠	8-453-011-11	NECK ASSY, NA299-M	
64		A-1644-094-A	VM BOARD, COMPLETE	

REF. NO.		PART.NO	DESCRIPTION	REMARK
65		A-1638-123-A	C BOARD, COMPLETE	
66		4-200-433-01	SPRING, EXTENSION	
67	⚠	1-416-654-11	COIL, DEMAGNETIC	
68		*4-202-988-01	CUSHION, BOX	
69		*4-060-802-01	HOLDER, DGC	
70		3-704-372-01	HOLDER, HV CABLE	
71	⚠	1-251-317-31	CAP ASSY, HIGH-VOLTAGE	
72		3-704-495-01	SPACER, DY	
73	⚠	8-735-053-05	PICTURE TUBE (M68LNH060X)	
74		4-036-188-01	SCREW, SELF TAPPING	
75		4-308-870-00	CLIP, LEAD WIRE	
76		1-452-094-00	MAGNET, ROTATABLE DISK; 15MM	
77		4-425-032-00	MAGNET, DISK; 10MM	
78		X-4387-214-1	PERMALLOY ASSY, CORRECTION	
79		3-701-007-00	BAND, BINDING	

SECTION 7
ELECTRICAL PARTS LIST

Note : Les composants indentifies par une trame et par une marque ⚠ sonte d'une importance critique pour la securite. Ne les remplacer que par des pieces du numero specifie.

Note : The components identified by shading and marked ⚠ are critical for safety. Replace only with the part numbers specified in the parts list.

- Items marked " * " are not stocked since they are seldom required for routine service. Some delay should be anticipated when ordering these items.
-
- All variable and adjustable resistors have characteristic curve B, unless otherwise noted.
- RESISTORS
- All resistors are in ohms.
- F : nonflammable.

When indicating parts by reference number, please include the board name.

CAPACITORS MF : mF, PF : mmF

COILS MMH : mH , uH

B2

REF. NO.	PART.NO	DESCRIPTION	REMARK
	A-1620-111-A	B2 BOARD, COMPLETE **********	
		< CAPACITOR >	
C3300	1-285-261-11	ELECT 100MF	20% 16V
C3301	1-285-261-11	ELECT 100MF	20% 16V
C3302	1-126-933-11	ELECT 100MF	20% 16V
C3307	1-164-004-11	CERAMIC CHIP 0.1MF	10% 25V
C3308	1-126-964-11	ELECT 10MF	20% 50V
C3309	1-126-964-11	ELECT 10MF	20% 50V
C3310	1-164-004-11	CERAMIC CHIP 0.1MF	10% 25V
C3311	1-126-964-11	ELECT 10MF	20% 50V
C3312	1-126-964-11	ELECT 10MF	20% 50V
C3313	1-163-809-11	CERAMIC CHIP 0.047MF	10% 25V
C3314	1-163-809-11	CERAMIC CHIP 0.047MF	10% 25V
C3315	1-163-809-11	CERAMIC CHIP 0.047MF	10% 25V
C3316	1-164-004-11	CERAMIC CHIP 0.1MF	10% 25V
C3317	1-164-004-11	CERAMIC CHIP 0.1MF	10% 25V
C3319	1-126-964-11	ELECT 10MF	20% 50V
C3320	1-164-004-11	CERAMIC CHIP 0.1MF	10% 25V
C3321	1-164-004-11	CERAMIC CHIP 0.1MF	10% 25V
C3322	1-164-004-11	CERAMIC CHIP 0.1MF	10% 25V
C3323	1-164-004-11	CERAMIC CHIP 0.1MF	10% 25V
C3324	1-164-004-11	CERAMIC CHIP 0.1MF	10% 25V
C3325	1-126-964-11	ELECT 10MF	20% 50V
C3326	1-164-004-11	CERAMIC CHIP 0.1MF	10% 25V
C3327	1-164-004-11	CERAMIC CHIP 0.1MF	10% 25V
C3328	1-164-004-11	CERAMIC CHIP 0.1MF	10% 25V
C3329	1-164-004-11	CERAMIC CHIP 0.1MF	10% 25V
C3330	1-126-964-11	ELECT 10MF	20% 50V
C3331	1-107-823-11	CERAMIC CHIP 0.47MF	10% 16V
C3333	1-126-964-11	ELECT 10MF	20% 50V
C3341	1-164-004-11	CERAMIC CHIP 0.1MF	10% 25V
C3344	1-164-004-11	CERAMIC CHIP 0.1MF	10% 25V
C3351	1-126-964-11	ELECT 10MF	20% 50V
C3353	1-164-004-11	CERAMIC CHIP 0.1MF	10% 25V
C3354	1-104-664-11	ELECT 47MF	20% 16V
C3355	1-164-004-11	CERAMIC CHIP 0.1MF	10% 25V
C3356	1-164-004-11	CERAMIC CHIP 0.1MF	10% 25V
C3359	1-164-004-11	CERAMIC CHIP 0.1MF	10% 25V
C3361	1-126-964-11	ELECT 10MF	20% 50V
		< CONNECTOR >	
CN3100	1-695-301-11	CONNECTOR, BOARD TO BOARD 40P	
		< IC >	
IC3300	8-759-991-41	IC L78L05ACZ-AP	
IC3301	8-759-295-09	IC TLC2932IPW-E20	
IC3302	8-759-546-03	IC SAA4977H-518	
IC3303	8-759-439-63	IC SAA4945H/V1	
IC3304	8-759-546-05	IC SAA4955TJ-V1-T3	
		< COIL >	
L3302	1-412-029-11	INDUCTOR CHIP 10UH	
L3303	1-412-029-11	INDUCTOR CHIP 10UH	
L3304	1-412-029-11	INDUCTOR CHIP 10UH	
L3305	1-412-029-11	INDUCTOR CHIP 10UH	
L3306	1-412-029-11	INDUCTOR CHIP 10UH	
L3307	1-412-029-11	INDUCTOR CHIP 10UH	
L3313	1-412-029-11	INDUCTOR CHIP 10UH	
L3314	1-412-029-11	INDUCTOR CHIP 10UH	
		< TRANSISTOR >	
Q3300	1-801-806-11	TRANSISTOR DTC144EKA-T146	
		< RESISTOR >	
R3302	1-216-025-91	RES,CHIP 100	5% 1/10W
R3303	1-216-025-91	RES,CHIP 100	5% 1/10W
R3304	1-216-295-91	SHORT 0	
R3305	1-216-295-91	SHORT 0	
R3306	1-216-295-91	SHORT 0	
R3307	1-216-295-91	SHORT 0	
R3308	1-216-049-91	RES, CHIP 1K	5% 1/10W
R3312	1-216-025-91	RES,CHIP 100	5% 1/10W
R3314	1-216-061-00	RES,CHIP 3.3K	5% 1/10W
R3315	1-216-041-00	RES,CHIP 470	5% 1/10W

The components identified by shading and marked ⚠ are critical for safety
Replace only with the part number specified.

REF. NO.	PART.NO	DESCRIPTION	REMARK
R3316	1-216-041-00	RES,CHIP 470 5% 1/10W	
R3317	1-216-041-00	RES,CHIP 470 5% 1/10W	
R3318	1-216-041-00	RES,CHIP 470 5% 1/10W	
R3319	1-216-041-00	RES,CHIP 470 5% 1/10W	
R3320	1-216-041-00	RES,CHIP 470 5% 1/10W	
R3323	1-216-049-91	RES,CHIP 1K 5% 1/10W	
R3324	1-216-071-00	RES,CHIP 8.2K 5% 1/10W	
R3325	1-216-049-91	RES,CHIP 1K 5% 1/10W	
R3331	1-216-047-91	RES,CHIP 820 5% 1/10W	
R3332	1-216-047-91	RES,CHIP 820 5% 1/10W	
R3336	1-216-033-00	RES,CHIP 220 5% 1/10W	
R3337	1-216-089-91	RES,CHIP 47K 5% 1/10W	
R3338	1-216-295-91	SHORT 0	
R3339	1-216-295-91	SHORT 0	
R3340	1-216-051-00	RES,CHIP 1.2K 5% 1/10W	
R3341	1-216-041-00	RES,CHIP 470 5% 1/10W	
R3342	1-216-051-00	RES,CHIP 1.2K 5% 1/10W	
R3343	1-216-051-00	RES,CHIP 1.2K 5% 1/10W	
R3344	1-216-295-91	SHORT 0	
R3347	1-216-295-91	SHORT 0	
R3348	1-216-021-00	RES,CHIP 68 5% 1/10W	
R3362	1-216-295-91	SHORT 0	
R3363	1-216-295-91	SHORT 0	
R3364	1-216-295-91	SHORT 0	
R3365	1-216-295-91	SHORT 0	
R3369	1-216-295-91	SHORT 0	
R3371	1-216-295-91	SHORT 0	
R3376	1-216-057-00	RES,CHIP 2.2K 5% 1/10W	
R3377	1-216-057-00	RES,CHIP 2.2K 5% 1/10W	
R3378	1-216-295-91	SHORT 0	
R3379	1-216-295-91	SHORT 0	
R3380	1-216-295-91	SHORT 0	
R3381	1-216-295-91	SHORT 0	
R3382	1-216-295-91	SHORT 0	
R3385	1-216-033-00	RES,CHIP 220 5% 1/10W	
		**********	
	A-1624-073-A	F BOARD, COMPLETE	
		**********	
	4-203-258-11	HOLDER, LED	
		< CAPACITOR >	
C7125	1-126-969-11	ELECT 220MF 20% 50V	
		< CONNECTOR >	
CN7100	*1-568-879-11	PIN, CONNECTOR 4P	
CN7600	⚠ *1-691-291-11	PIN, CONNECTOR (PC BOARD) 5P	
CN7644	⚠ *1-580-844-11	PIN, CONNECTOR (POWER)	
		< DIODE >	
D7125	8-719-030-11	DIODE SLA-570KT3F	
		< IC >	
IC7125	8-749-014-59	IC TSOP1740KS1	
		< RESISTOR >	
R7125	1-247-815-91	CARBON 220 5% 1/4W	
R7126	1-249-411-11	CARBON 330 5% 1/4W	
		< SWITCH>	
S7601	⚠ 1-571-433-21	SWITCH, PUSH (AC POWER)	
		**********	
	A-1624-074-A	F1 BOARD, COMPLETE	
		**********	
		< CAPACITOR >	
C7626	⚠ 1-107-566-11	FILM 0.47MF 20% 300V	
		< CONNECTOR >	
CN7611	⚠ *1-580-844-11	PIN, CONNECTOR (POWER)	
CN7622	1-695-915-11	TAB (CONTACT)	
CN7633	⚠ *1-580-843-11	PIN, CONNECTOR (POWER)	
		< FUSE >	
F7626	⚠ 1-532-299-00	FUSE 5A/250V	
	⚠ *1-533-725-11	HOLDER, FUSE (F7626)	
		< RESISTOR >	
R7626	⚠ 1-202-719-00	SOLID 1M 20% 1/2W	
		< TRANSFORMER >	
LF7627	⚠ 1-433-488-11	TRANSFORMER, LINE FILTER	
		< VARISTOR >	
VDR762	⚠ 1-801-073-31	VARISTOR ERZV14D471	
		**********	
	A-1630-974-A	A BOARD, COMPLETE (KV-29FX60A/29FX60D/	
		********** 29FX60E)	
	A-1630-986-A	A BOARD, COMPLETE (KV-29FX60B)	
		**********	
	A-1630-987-A	A BOARD, COMPLETE (KV29FX60U)	
		**********	
	4-382-854-11	SCREW (M3X10), P, SW (+)	
	4-931-401-01	HEAT SINK, V.OUT	

REF. NO.	PART.NO	DESCRIPTION			REMARK
		< CAPACITOR >			
C1100	1-104-664-11	ELECT	47MF	20%	25V
C1101	1-104-666-11	ELECT	220MF	20%	25V
C1126	1-162-568-11	CERAMIC CHIP	0.33MF	10%	16V
C1127	1-137-035-11	FILM	0.47MF	10%	100V
C1128	1-163-135-00	CERAMIC CHIP	560PF	5%	50V
C1129	1-130-777-00	FILM	0.1MF	5%	63V
C1130	1-163-017-00	CERAMIC CHIP	0.0047MF	10%	50V
C1131	1-163-251-11	CERAMIC CHIP	100PF	5%	50V
C1132	1-163-021-91	CERAMIC CHIP	0.01MF	10%	50V
C1133	1-164-004-11	CERAMIC CHIP	0.1MF	10%	25V
C1134	1-126-961-11	ELECT	2.2MF	20%	50V
C1135	1-164-004-11	CERAMIC CHIP	0.1MF	10%	25V
C1136	1-164-004-11	CERAMIC CHIP	0.1MF	10%	25V
C1137	1-126-953-81	ELECT	2200MF	20%	35V
C1138	1-126-953-81	ELECT	2200MF	20%	35V
C1139	1-104-329-11	CERAMIC CHIP	0.1MF	10%	50V
C1140	1-111-216-91	ELECT	150MF	20%	63V
C1151	1-162-568-11	CERAMIC CHIP	0.33MF	10%	16V
C1152	1-137-035-11	FILM	0.47MF	10%	100V
C1153	1-163-135-00	CERAMIC CHIP	560PF	5%	50V
C1154	1-130-777-00	FILM	0.1MF	5%	63V
C1155	1-163-017-00	CERAMIC CHIP	0.0047MF	10%	50V
C1156	1-163-251-11	CERAMIC CHIP	100PF	5%	50V
C1157	1-163-021-91	CERAMIC CHIP	0.01MF	10%	50V
C1158	1-164-004-11	CERAMIC CHIP	0.1MF	10%	25V
C1159	1-164-004-11	CERAMIC CHIP	0.1MF	10%	25V
C1160	1-164-004-11	CERAMIC CHIP	0.1MF	10%	25V
C1161	1-104-329-11	CERAMIC CHIP	0.1MF	10%	50V
C1162	1-111-216-91	ELECT	150MF	20%	63V
C1177	1-164-004-11	CERAMIC CHIP	0.1MF	10%	25V
C1178	1-126-964-11	ELECT	10MF	20%	50V
C1179	1-126-964-11	ELECT	10MF	20%	50V
C1180	1-126-952-91	ELECT	1000MF	20%	35V
C1181	1-126-952-91	ELECT	1000MF	20%	35V
C1182	1-164-004-11	CERAMIC CHIP	0.1MF	10%	25V
C1183	1-164-004-11	CERAMIC CHIP	0.1MF	10%	25V
C1184	1-107-823-11	CERAMIC CHIP	0.47MF	10%	16V
C1226	1-104-661-91	ELECT	330MF	20%	16V
C1326	1-163-059-91	CERAMIC CHIP	0.01MF	10%	50V
C1327	1-126-934-11	ELECT	220MF	20%	10V
C1328	1-163-117-00	CERAMIC CHIP	100PF	5%	50V
C1601	1-164-004-11	CERAMIC CHIP	0.1MF	10%	25V
C1602	1-164-004-11	CERAMIC CHIP	0.1MF	10%	25V
C1603	1-126-933-11	ELECT	100MF	20%	16V
C1604	1-126-933-11	ELECT	100MF	20%	16V
C1605	1-164-004-11	CERAMIC CHIP	0.1MF	10%	25V
C1607	1-164-004-11	CERAMIC CHIP	0.1MF	10%	25V
C1608	1-126-934-11	ELECT	220MF	20%	16V
C1609	1-164-004-11	CERAMIC CHIP	0.1MF	10%	25V
C1610	1-164-004-11	CERAMIC CHIP	0.1MF	10%	25V
C1611	1-126-933-11	ELECT	100MF	20%	16V
C1612	1-164-004-11	CERAMIC CHIP	0.1MF	10%	25V
C1613	1-126-933-11	ELECT	100MF	20%	16V
C1614	1-164-004-11	CERAMIC CHIP	0.1MF	10%	25V
C1615	1-164-004-11	CERAMIC CHIP	0.1MF	10%	25V
C1617	1-164-004-11	CERAMIC CHIP	0.1MF	10%	25V
		< CONNECTOR >			
CN1111	*1-564-520-11	PLUG, CONNECTOR 5P			
CN1200	1-695-298-11	CONNECTOR, BOARD TO BOARD 40P			
CN1401	1-695-298-11	CONNECTOR, BOARD TO BOARD 40P			
CN1600	1-900-903-64	CONNECTOR ASSY 20P			
CN1601	1-900-903-64	CONNECTOR ASSY 20P			
CN1602	1-900-903-64	CONNECTOR ASSY 20P			
CN1700	*1-568-879-11	PIN, CONNECTOR 4P			
CN1701	1-573-296-11	CONNECTOR, BOARD TO BOARD 10P			
CN1702	*1-568-880-51	PIN, CONNECTOR 5P			
CN1703	*1-564-514-11	PLUG, CONNECTOR 11P			
CN1801	1-695-299-11	CONNECTOR, BOARD TO BOARD 50P			
CN1901	1-695-298-11	CONNECTOR, BOARD TO BOARD 40P			
		< DIODE >			
D1100	8-719-914-43	DIODE DAN202K-T-146			
D1101	8-719-914-44	DIODE DAP202K-T-146			
D1102	8-719-914-43	DIODE DAN202K-T-146			
D1103	8-719-914-43	DIODE DAN202K-T-146			
D1401	8-719-105-99	DIODE UDZ-TE-17-6.2B			
D1402	8-719-105-99	DIODE UDZ-TE-17-6.2B			
D1403	8-719-105-99	DIODE UDZ-TE-17-6.2B			
D1404	8-719-105-99	DIODE UDZ-TE-17-6.2B			
D1626	8-719-914-43	DIODE DAN202K-T-146			
D1627	8-719-914-43	DIODE DAN202K-T-146			
D1629	8-719-914-43	DIODE DAN202K-T-146			
		< FERRITE BEAD >			
FB1126	1-535-030-00	LEAD, JUMPER (5.0MM)			
		< IC >			
IC1126	8-759-544-25	IC TDA7482			
IC1151	8-759-544-25	IC TDA7482			
IC1176	8-759-333-24	IC LM1876TF			
IC1400	8-752-072-94	IC CXA1875AM-T4			
IC1601	8-759-457-44	IC KA78R05TU			
IC1602	8-759-457-44	IC KA78R05TU			
IC1603	8-759-295-82	IC L78L08ACZ-AP			
IC1604	8-759-544-13	IC KA78R09TU			
IC1605	8-759-544-11	IC KA78R33TU			
		< COIL >			
L1126	1-416-857-11	CHOKE COIL 65uH			

A

REF. NO.	PART.NO	DESCRIPTION	REMARK
L1127	1-414-158-11	INDUCTOR 2.2UH	
L1128	1-414-158-11	INDUCTOR 2.2UH	
L1151	1-416-857-11	CHOKE COIL 65uH	
L1152	1-414-158-11	INDUCTOR 2.2UH	
L1153	1-414-158-11	INDUCTOR 2.2UH	
L1326	1-414-183-41	INDUCTOR 10UH	
		< TRANSISTOR >	
Q1100	8-729-216-22	TRANSISTOR 2SA1037K-T-146-R	
Q1201	8-729-620-06	TRANSISTOR 2SC2412K-T-146-R	
Q1202	8-729-620-06	TRANSISTOR 2SC2412K-T-146-R	
Q1203	8-729-620-06	TRANSISTOR 2SC2412K-T-146-R	
Q1204	8-729-620-06	TRANSISTOR 2SC2412K-T-146-R	
Q1226	8-729-620-06	TRANSISTOR 2SC2412K-T-146-R	
Q1227	8-729-620-06	TRANSISTOR 2SC2412K-T-146-R	
Q1229	8-729-027-38	TRANSISTOR DTA144EKA-T146	
Q1326	8-729-620-06	TRANSISTOR 2SC2412K-T-146-R	
Q1327	8-729-216-22	TRANSISTOR 2SA1037K-T-146-R	
Q1328	8-729-620-06	TRANSISTOR 2SC2412K-T-146-R	
Q1329	8-729-216-22	TRANSISTOR 2SA1037K-T-146-R	
Q1400	8-729-046-47	TRANSISTOR KSC2500-BTA	
Q1601	8-729-620-06	TRANSISTOR 2SC2412K-T-146-R	
Q1626	8-729-620-06	TRANSISTOR 2SC2412K-T-146-R	
		< RESISTOR >	
R1001	1-216-295-91	SHORT 0	
R1002	1-216-295-91	SHORT 0	
R1003	1-216-295-91	SHORT 0	
R1004	1-216-295-91	SHORT 0	
R1005	1-216-295-91	SHORT 0	
R1006	1-216-295-91	SHORT 0	
R1100	1-216-025-91	RES,CHIP 100 5% 1/10W	
R1101	1-216-057-00	RES,CHIP 2.2K 5% 1/10W	
R1102	1-216-057-00	RES,CHIP 2.2K 5% 1/10W	
R1126	1-216-631-11	METAL CHIP 150 0.50% 1/10W	
R1127	1-216-075-00	RES,CHIP 12K 5% 1/10W	
R1128	1-216-041-00	RES,CHIP 470 5% 1/10W	
R1151	1-216-631-11	METAL CHIP 150 0.50% 1/10W	
R1152	1-216-075-00	RES,CHIP 12K 5% 1/10W	
R1153	1-216-041-00	RES,CHIP 470 5% 1/10W	
R1176	1-216-063-91	RES,CHIP 3.9K 5% 1/10W	
R1179	1-216-357-00	METAL OXIDE 4.7 5% 1W F	
R1180	1-216-081-91	RES,CHIP 22K 5% 1/10W	
R1181	1-216-045-91	RES,CHIP 680 5% 1/10W	
R1182	1-216-081-00	RES,CHIP 22K 5% 1/10W	
R1183	1-216-045-00	RES,CHIP 680 5% 1/10W	
R1184	1-216-089-91	RES,CHIP 47K 5% 1/10W	
R1185	1-216-089-91	RES,CHIP 47K 5% 1/10W	
R1201	1-216-089-91	RES,CHIP 47K 5% 1/10W	
R1202	1-216-083-00	RES,CHIP 27K 5% 1/10W	
R1203	1-216-083-00	RES,CHIP 27K 5% 1/10W	

REF. NO.	PART.NO	DESCRIPTION	REMARK
R1204	1-216-071-00	RES,CHIP 8.2K 5% 1/10W	
R1205	1-216-089-91	RES,CHIP 47K 5% 1/10W	
R1206	1-216-073-00	RES,CHIP 10K 5% 1/10W	
R1207	1-216-065-91	RES,CHIP 4.7K 5% 1/10W	
R1208	1-216-089-91	RES,CHIP 47K 5% 1/10W	
R1209	1-216-065-91	RES,CHIP 4.7K 5% 1/10W	
R1210	1-216-089-91	RES,CHIP 47K 5% 1/10W	
R1226	1-216-073-00	RES,CHIP 10K 5% 1/10W	
R1227	1-216-073-00	RES,CHIP 10K 5% 1/10W	
R1228	1-216-073-00	RES,CHIP 10K 5% 1/10W	
R1229	1-216-073-00	RES,CHIP 10K 5% 1/10W	
R1230	1-216-055-00	RES,CHIP 1.8K 5% 1/10W	
R1232	1-216-295-91	SHORT 0	
R1233	1-216-049-91	RES,CHIP 1K 5% 1/10W	
R1326	1-216-025-91	RES,CHIP 100 5% 1/10W	
R1327	1-216-025-91	RES,CHIP 100 5% 1/10W	
R1328	1-216-073-00	RES,CHIP 10K 5% 1/10W	
R1329	1-216-025-91	RES,CHIP 100 5% 1/10W	
R1330	1-216-041-00	RES,CHIP 470 5% 1/10W	
R1331	1-216-041-00	RES,CHIP 470 5% 1/10W	
R1332	1-216-041-00	RES,CHIP 470 5% 1/10W	
R1333	1-216-075-00	RES,CHIP 12K 5% 1/10W	
R1334	1-216-069-00	RES,CHIP 6.8K 5% 1/10W	
R1335	1-216-025-91	RES,CHIP 100 5% 1/10W	
R1336	1-216-041-00	RES,CHIP 470 5% 1/10W	
R1337	1-216-041-00	RES,CHIP 470 5% 1/10W	
R1338	1-216-001-00	RES,CHIP 10 5% 1/10W	
R1339	1-216-041-00	RES,CHIP 470 5% 1/10W	
R1340	1-216-043-91	RES,CHIP 560 5% 1/10W	
R1342	1-216-073-91	RES,CHIP 10K 5% 1/10W	
R1400	1-216-053-00	RES,CHIP 1.5K 5% 1/10W	
R1401	1-216-081-00	RES,CHIP 22K 5% 1/10W	
R1403	1-216-295-91	SHORT 0	
R1404	1-216-295-91	SHORT 0	
R1405	1-216-029-91	RES,CHIP 100 5% 1/10W	
R1407	1-216-029-91	RES,CHIP 100 5% 1/10W	
R1408	1-216-029-91	RES,CHIP 100 5% 1/10W	
R1409	1-216-029-91	RES,CHIP 100 5% 1/10W	
R1410	1-216-029-91	RES,CHIP 100 5% 1/10W	
R1601	1-216-057-00	RES,CHIP 2.2K 5% 1/10W	
R1602	1-216-691-11	METAL CHIP 47K 0.50% 1/10W	
R1603	1-216-025-91	RES,CHIP 100 5% 1/10W	
R1605	1-216-049-91	RES,CHIP 1K 5% 1/10W	
R1609	1-216-089-91	RES,CHIP 47K 5% 1/10W	
R1610	1-216-065-91	RES,CHIP 4.7K 5% 1/10W	
R1615	1-216-025-91	RES,CHIP 100 5% 1/10W	
R1616	1-216-304-11	RES,CHIP 3.3 5% 1/10W	
R1617	1-216-304-11	RES,CHIP 3.3 5% 1/10W	
R1618	1-216-295-91	SHORT 0	
R1621	1-216-027-00	RES,CHIP 120 5% 1/10W	
R1622	1-216-029-00	RES,CHIP 150 5% 1/10W	

REF. NO.	PART.NO	DESCRIPTION	REMARK
R1623	1-216-033-00	RES,CHIP 220 5% 1/10W	
R1625	1-216-295-91	SHORT 0	
		< TUNER >	
TU1326	1-693-338-11	TUNER/VIF (AEP)	(KV-29FX60A/29FX60D/29FX60E)
	1-693-340-11	TUNER/VIF (FR)	(KV-29FX60B)
	1-693-339-11	TUNER/VIF (UK)	(KV-29FX60U)
**********			
	A-1634-046-A	M BOARD, COMPLETE **********	
		< CAPACITOR >	
C9100	1-115-340-11	CERAMIC CHIP 0.22MF 10% 25V	
C9101	1-163-251-11	CERAMIC CHIP 100PF 5% 50V	
C9102	1-163-251-11	CERAMIC CHIP 100PF 5% 50V	
C9104	1-104-664-11	ELECT 47MF 20% 25V	
C9105	1-164-004-11	CERAMIC CHIP 0.1MF 10% 25V	
C9110	1-165-321-11	CERAMIC CHIP 0.68MF 10% 16V	
C9111	1-164-157-11	CERAMIC CHIP 0.068MF 10% 25V	
C9112	1-164-004-11	CERAMIC CHIP 0.1MF 10% 25V	
C9113	1-164-004-11	CERAMIC CHIP 0.1MF 10% 25V	
C9114	1-164-004-11	CERAMIC CHIP 0.1MF 10% 25V	
C9115	1-115-340-11	CERAMIC CHIP 0.22MF 10% 25V	
C9117	1-164-004-11	CERAMIC CHIP 0.1MF 10% 25V	
C9118	1-104-664-11	ELECT 47MF 20% 25V	
C9119	1-163-259-91	CERAMIC CHIP 220PF 5% 50V	
C9121	1-163-251-11	CERAMIC CHIP 100PF 5% 50V	
C9122	1-115-340-11	CERAMIC CHIP 0.22MF 10% 25V	
C9123	1-164-004-11	CERAMIC CHIP 0.1MF 10% 25V	
C9124	1-164-004-11	CERAMIC CHIP 0.1MF 10% 25V	
C9125	1-164-004-11	CERAMIC CHIP 0.1MF 10% 25V	
C9126	1-163-105-00	CERAMIC CHIP 33PF 5% 50V	
C9127	1-163-105-00	CERAMIC CHIP 33PF 5% 50V	
C9128	1-163-105-00	CERAMIC CHIP 33PF 5% 50V	
C9129	1-163-105-00	CERAMIC CHIP 33PF 5% 50V	
C9130	1-163-105-00	CERAMIC CHIP 33PF 5% 50V	
C9131	1-163-105-00	CERAMIC CHIP 33PF 5% 50V	
C9132	1-164-004-11	CERAMIC CHIP 0.1MF 10% 25V	
C9400	1-115-340-11	CERAMIC CHIP 0.22MF 10% 25V	
C9500	1-104-664-11	ELECT 47MF 20% 25V	
C9502	1-104-664-11	ELECT 47MF 20% 25V	
C9503	1-126-964-11	ELECT 10MF 20% 50V	
C9504	1-164-004-11	CERAMIC CHIP 0.1MF 10% 25V	
C9505	1-104-665-11	ELECT 100MF 20% 25V	
C9506	1-163-251-11	CERAMIC CHIP 100PF 5% 50V	
C9507	1-115-340-11	CERAMIC CHIP 0.22MF 10% 25V	
C9508	1-115-340-11	CERAMIC CHIP 0.22MF 10% 25V	
C9509	1-163-251-11	CERAMIC CHIP 100PF 5% 50V	
C9510	1-115-340-11	CERAMIC CHIP 0.22MF 10% 25V	
C9511	1-164-004-11	CERAMIC CHIP 0.1MF 10% 25V	
C9512	1-164-004-11	CERAMIC CHIP 0.1MF 10% 25V	
C9513	1-164-004-11	CERAMIC CHIP 0.1MF 10% 25V	
C9514	1-163-235-11	CERAMIC CHIP 22PF 5% 50V	
C9515	1-163-235-11	CERAMIC CHIP 22PF 5% 50V	
C9516	1-163-251-11	CERAMIC CHIP 100PF 5% 50V	
C9517	1-163-021-91	CERAMIC CHIP 0.01MF 10% 50V	
C9518	1-115-340-11	CERAMIC CHIP 0.22MF 10% 25V	
C9519	1-126-964-11	ELECT 10MF 20% 50V	
C9520	1-163-251-11	CERAMIC CHIP 100PF 5% 50V	
		< CONNECTOR >	
CN9101	1-695-301-11	CONNECTOR, BOARD TO BOARD 40P	
		< DIODE >	
D9100	8-719-988-62	DIODE 1SS355TE-17	
D9101	8-719-988-62	DIODE 1SS355TE-17	
D9102	8-719-988-62	DIODE 1SS355TE-17	
D9103	8-719-988-62	DIODE 1SS355TE-17	
D9104	8-719-056-83	DIODE UDZ-TE-17-6.8B	
D9105	8-719-914-43	DIODE DAN202K-T-146	
D9107	8-719-025-31	DIODE 02CZ5.6-TE85L	
D9108	8-719-914-44	DIODE DAP202K-T-146	
D9109	8-719-105-91	DIODE MA3056M-TX	
D9110	8-719-914-43	DIODE DAN202KT-146	
D9111	8-719-105-91	DIODE MA3056M-TX	
		< FILTER >	
FL9101	1-236-071-11	ENCAPSULATED COMPONENT	
FL9500	1-236-071-11	ENCAPSULATED COMPONENT	
FL9501	1-236-071-11	ENCAPSULATED COMPONENT	
		< IC >	
IC9100	8-759-988-13	IC LM393PS-E20	
IC9104	8-759-259-18	IC MB3793-42PNF-ER	
IC9105	8-759-544-30	IC SAB-C161R1-LM	
IC9107	8-759-395-27	IC TC55257DFTL-70V-EL	
IC9108	8-759-531-64	IC M24C32-BN6	
IC9109	8-759-544-32	IC M27C800-100K1	
IC9110	8-759-559-96	IC HEF-4094BT	
IC9500	8-759-034-47	IC MC74F00M-T2	
IC9502	8-759-452-22	IC SDA5273P-C134-GEG	
		< COIL >	
L9400	1-412-029-11	INDUCTOR CHIP 10UH	
L9401	1-412-029-11	INDUCTOR CHIP 10UH	
		< TRANSISTOR >	
Q9100	8-729-620-06	TRANSISTOR 2SC2412K-T-146-R	
Q9101	8-729-620-06	TRANSISTOR 2SC2412K-T-146-R	
Q9102	8-729-216-22	TRANSISTOR 2SA1037K-T-146-R	
Q9103	8-729-620-06	TRANSISTOR 2SC2412K-T-146-R	

M

REF. NO.	PART.NO	DESCRIPTION	REMARK
Q9105	8-729-620-06	TRANSISTOR 2SC2412K-T-146-R	
Q9106	8-729-027-46	TRANSISTOR DTC114YKA-T146	
Q9107	8-729-027-46	TRANSISTOR DTC114YKA-T146	
Q9108	8-729-027-46	TRANSISTOR DTC114YKA-T146	
Q9109	8-729-027-46	TRANSISTOR DTC114YKA-T146	
Q9110	8-729-620-06	TRANSISTOR 2SC2412K-T-146-R	
Q9500	8-729-216-22	TRANSISTOR 2SA1037K-T-146-R	
Q9501	8-729-216-22	TRANSISTOR 2SA1037K-T-146-R	
Q9502	8-729-216-22	TRANSISTOR 2SA1037K-T-146-R	
Q9503	1-801-806-11	TRANSISTOR DTC144EKA-T146	
Q9504	1-801-806-11	TRANSISTOR DTC144EKA-T146	
		< RESISTOR >	
R9100	1-216-073-00	RES,CHIP 10K 5% 1/10W	
R9101	1-216-033-00	RES,CHIP 220 5% 1/10W	
R9102	1-216-033-00	RES,CHIP 220 5% 1/10W	
R9103	1-216-025-91	RES,CHIP 100 5% 1/10W	
R9104	1-216-073-00	RES,CHIP 10K 5% 1/10W	
R9105	1-216-073-00	RES,CHIP 10K 5% 1/10W	
R9107	1-216-025-91	RES,CHIP 100 5% 1/10W	
R9108	1-216-025-91	RES,CHIP 100 5% 1/10W	
R9109	1-216-073-00	RES,CHIP 10K 5% 1/10W	
R9110	1-216-081-00	RES,CHIP 22K 5% 1/10W	
R9111	1-216-025-91	RES,CHIP 100 5% 1/10W	
R9112	1-216-025-91	RES,CHIP 100 5% 1/10W	
R9113	1-216-033-00	RES,CHIP 220 5% 1/10W	
R9114	1-216-083-00	RES,CHIP 27K 5% 1/10W	
R9115	1-216-081-00	RES,CHIP 22K 5% 1/10W	
R9116	1-216-073-00	RES,CHIP 10K 5% 1/10W	
R9117	1-216-073-00	RES,CHIP 10K 5% 1/10W	
R9119	1-216-073-00	RES,CHIP 10K 5% 1/10W	
R9120	1-216-073-00	RES,CHIP 10K 5% 1/10W	
R9121	1-216-017-91	RES,CHIP 47 5% 1/10W	
R9122	1-216-049-91	RES,CHIP 1K 5% 1/10W	
R9123	1-216-073-00	RES,CHIP 10K 5% 1/10W	
R9127	1-216-049-91	RES,CHIP 1K 5% 1/10W	
R9138	1-216-049-91	RES,CHIP 1K 5% 1/10W	
R9140	1-216-057-00	RES,CHIP 2.2K 5% 1/10W	
R9141	1-216-049-91	RES,CHIP 1K 5% 1/10W	
R9142	1-216-041-00	RES,CHIP 470 5% 1/10W	
R9143	1-216-049-91	RES,CHIP 1K 5% 1/10W	
R9144	1-216-057-00	RES,CHIP 2.2K 5% 1/10W	
R9145	1-216-049-91	RES,CHIP 1K 5% 1/10W	
R9146	1-216-049-91	RES,CHIP 1K 5% 1/10W	
R9147	1-216-049-91	RES,CHIP 1K 5% 1/10W	
R9148	1-216-073-00	RES,CHIP 10K 5% 1/10W	
R9149	1-216-025-91	RES,CHIP 100 5% 1/10W	
R9150	1-216-025-91	RES,CHIP 100 5% 1/10W	
R9151	1-216-025-91	RES,CHIP 100 5% 1/10W	
R9153	1-216-025-91	RES,CHIP 100 5% 1/10W	
R9159	1-216-069-00	RES,CHIP 6.8K 5% 1/10W	
R9161	1-216-069-00	RES,CHIP 6.8K 5% 1/10W	
R9162	1-216-069-00	RES,CHIP 6.8K 5% 1/10W	
R9164	1-216-069-00	RES,CHIP 6.8K 5% 1/10W	
R9166	1-216-073-00	RES,CHIP 10K 5% 1/10W	
R9168	1-216-069-00	RES,CHIP 6.8K 5% 1/10W	
R9169	1-216-069-00	RES,CHIP 6.8K 5% 1/10W	
R9172	1-216-069-00	RES,CHIP 6.8K 5% 1/10W	
R9173	1-216-295-91	SHORT 0	
R9174	1-216-025-91	RES,CHIP 100 5% 1/10W	
R9175	1-216-025-91	RES,CHIP 100 5% 1/10W	
R9176	1-216-025-91	RES,CHIP 100 5% 1/10W	
R9177	1-216-025-91	RES,CHIP 100 5% 1/10W	
R9178	1-216-025-91	RES,CHIP 100 5% 1/10W	
R9184	1-216-025-91	RES,CHIP 100 5% 1/10W	
R9185	1-216-025-91	RES,CHIP 100 5% 1/10W	
R9186	1-216-025-91	RES,CHIP 100 5% 1/10W	
R9187	1-216-065-91	RES,CHIP 4.7K 5% 1/10W	
R9188	1-216-025-91	RES,CHIP 100 5% 1/10W	
R9189	1-216-025-91	RES,CHIP 100 5% 1/10W	
R9190	1-216-025-91	RES,CHIP 100 5% 1/10W	
R9191	1-216-025-91	RES,CHIP 100 5% 1/10W	
R9192	1-216-025-91	RES,CHIP 100 5% 1/10W	
R9193	1-216-097-91	RES,CHIP 100K 5% 1/10W	
R9194	1-216-097-91	RES,CHIP 100K 5% 1/10W	
R9195	1-216-097-91	RES,CHIP 100K 5% 1/10W	
R9196	1-216-073-00	RES,CHIP 10K 5% 1/10W	
R9197	1-216-073-00	RES,CHIP 10K 5% 1/10W	
R9500	1-216-295-91	SHORT 0	
R9501	1-216-295-91	SHORT 0	
R9502	1-216-295-91	SHORT 0	
R9504	1-216-041-00	RES,CHIP 470 5% 1/10W	
R9505	1-216-051-00	RES,CHIP 1.2K 5% 1/10W	
R9506	1-216-073-00	RES,CHIP 10K 5% 1/10W	
R9507	1-216-097-91	RES,CHIP 100K 5% 1/10W	
R9508	1-216-017-91	RES,CHIP 47 5% 1/10W	
R9509	1-216-049-91	RES,CHIP 1K 5% 1/10W	
R9510	1-216-017-91	RES,CHIP 47 5% 1/10W	
R9511	1-216-049-91	RES,CHIP 1K 5% 1/10W	
R9512	1-216-017-91	RES,CHIP 47 5% 1/10W	
R9513	1-216-017-91	RES,CHIP 47 5% 1/10W	
R9514	1-216-017-91	RES,CHIP 47 5% 1/10W	
R9515	1-216-295-91	SHORT 0	
R9516	1-216-295-91	SHORT 0	
R9517	1-216-295-91	SHORT 0	
R9518	1-216-049-91	RES,CHIP 1K 5% 1/10W	
R9519	1-216-039-00	RES,CHIP 390 5% 1/10W	
R9520	1-216-039-00	RES,CHIP 390 5% 1/10W	
R9521	1-216-039-00	RES,CHIP 390 5% 1/10W	
R9522	1-216-295-91	SHORT 0	
R9523	1-216-295-91	SHORT 0	
R9524	1-216-295-91	SHORT 0	

The components identified by shading and marked ⚠ are critical for safety
Replace only with the part number specified.

M **C**

REF. NO.	PART.NO	DESCRIPTION			REMARK
R9525	1-216-057-00	RES,CHIP	2.2K	5%	1/10W
R9526	1-216-057-00	RES,CHIP	2.2K	5%	1/10W
R9527	1-216-057-00	RES,CHIP	2.2K	5%	1/10W
R9528	1-216-025-91	RES,CHIP	100	5%	1/10W
R9529	1-216-025-91	RES,CHIP	100	5%	1/10W
R9530	1-216-025-91	RES,CHIP	100	5%	1/10W
R9531	1-216-295-91	SHORT	0		
R9532	1-216-061-00	RES,CHIP	3.3K	5%	1/10W
		< CRYSTAL >			
X9101	1-781-107-21	RESONATOR			
X9500	1-760-551-21	VIBRATOR, CERAMIC			
**********					
	A-1638-123-A	C BOARD, COMPLETE			
		**********			
	1-671-108-11	PWB, C IC			
	4-382-854-11	SCREW (M3X10), P, SW (+)			
		< CAPACITOR >			
C5301	1-102-129-91	CERAMIC	0.01MF	10%	50V
C5302	1-128-525-91	ELECT	470MF	20%	16V
C5304	1-107-657-91	ELECT	1MF	20%	350V
C5305	1-137-052-91	FILM	0.047MF	10%	400V
C5306	1-102-157-91	CERAMIC	560PF	10%	500V
C5325	1-102-959-91	CERAMIC	22PF	5%	50V
C5326	1-102-157-91	CERAMIC	560PF	10%	500V
C5327	1-102-129-91	CERAMIC	0.01MF	10%	50V
C5328	1-128-525-91	ELECT	470MF	20%	16V
C5329	1-107-657-91	ELECT	1MF	20%	350V
C5330	1-137-052-91	FILM	0.047MF	10%	400V
C5350	1-107-907-91	ELECT	22MF	20%	50V
C5352	1-102-157-91	CERAMIC	560PF	10%	500V
C5353	1-102-129-91	CERAMIC	0.01MF	10%	50V
C5354	1-128-525-91	ELECT	470MF	20%	16V
C5355	1-107-657-91	ELECT	1MF	20%	350V
C5356	1-137-052-91	FILM	0.047MF	10%	400V
C5375	1-107-902-91	ELECT	1MF	20%	50V
C5377	1-162-115-91	CERAMIC	330PF	10%	2KV
C5378	1-162-116-91	CERAMIC	680PF	10%	2KV
C5379	1-162-116-91	CERAMIC	680PF	10%	2KV
C5380	1-107-652-91	ELECT	10MF	20%	250V
C5381	1-162-116-91	CERAMIC	680PF	10%	2KV
C5382	1-162-114-71	CERAMIC	0.0047MF		2KV
		< CONNECTOR >			
CN5400	1-564-511-11	PLUG, CONNECTOR 8P			
CN5511	1-695-915-21	TAB (CONTACT)			
CN5522	1-695-915-21	TAB (CONTACT)			
CN5600	1-508-766-12	PIN, CONNECTOR (5MM PITCH) 4P			

REF. NO.	PART.NO	DESCRIPTION			REMARK
		< DIODE >			
D5300	8-719-921-20	DIODE 1SS119-25TD			
D5302	8-719-989-09	DIODE 1SS83TA			
D5325	8-719-921-20	DIODE 1SS119-25TD			
D5326	8-719-923-58	DIODE MTZJ-T-77-9.1			
D5327	8-719-989-09	DIODE 1SS83TA			
D5350	8-719-921-20	DIODE 1SS119-25TD			
D5351	8-719-991-33	DIODE 1SS133T-77			
D5353	8-719-989-09	DIODE 1SS83TA			
D5375	8-719-991-33	DIODE 1SS133T-77			
D5376	8-719-991-33	DIODE 1SS133T-77			
D5377	8-719-936-83	DIODE GP08DPKG23			
D5378	8-719-923-84	DIODE MTZJ-T-77-13B			
D5379	8-719-982-96	DIODE MTZJ-T-77-2.2A			
D5380	8-719-982-96	DIODE MTZJ-T-77-2.2A			
D5381	8-719-031-34	DIODE RGP02-20EG23			
		< IC >			
IC5300	8-759-360-83	IC TDA6111Q/N4			
IC5325	8-759-360-83	IC TDA6111Q/N4			
IC5350	8-759-360-83	IC TDA6111Q/N4			
		< SOCKET >			
J5375 ⚠	1-540-071-22	SOCKET, CRT			
		< COIL >			
L5300	1-408-599-41	INDUCTOR	4.7UH		
L5325	1-408-599-41	INDUCTOR	4.7UH		
L5350	1-408-599-41	INDUCTOR	4.7UH		
L5375	1-410-671-41	INDUCTOR	47UH		
L5376	1-412-525-41	INDUCTOR	10UH		
L5377	1-414-183-11	INDUCTOR	10UH		
		< TRANSISTOR >			
Q5300	8-729-204-98	TRANSISTOR 2SC2551O-TPE2			
Q5325	8-729-204-98	TRANSISTOR 2SC2551O-TPE2			
Q5350	8-729-029-57	TRANSISTOR DTA144ESA-TP			
Q5351	8-729-204-98	TRANSISTOR 2SC2551O-TPE2			
Q5375	8-729-900-95	TRANSISTOR 2SC1740S-RT			
Q5376	8-729-026-40	TRANSISTOR 2SA933AS-RT			
		< RESISTOR >			
R5300	1-247-831-91	CARBON	1K	5%	1/4W
R5301	1-247-827-91	CARBON	680	5%	1/4W
R5302	1-247-813-91	CARBON	180	5%	1/4W
R5303	1-247-831-91	CARBON	1K	5%	1/4W
R5304	1-202-565-81	SOLID	470	20%	1/2W
R5305	1-215-926-51	METAL OXIDE	33K	5%	3W F
R5306	1-247-845-91	CARBON	3.9K	5%	1/4W
R5307	1-247-863-91	CARBON	22K	5%	1/4W

C D

The components identified by shading and marked ⚠ are critical for safety
Replace only with the part number specified.

REF. NO.		PART.NO	DESCRIPTION			REMARK
R5325		1-247-831-91	CARBON	1K	5%	1/4W
R5326		1-247-827-91	CARBON	680	5%	1/4W
R5327		1-247-813-91	CARBON	180	5%	1/4W
R5328		1-247-831-91	CARBON	1K	5%	1/4W
R5329		1-202-565-81	SOLID	470	20%	1/2W
R5330		1-215-926-51	METAL OXIDE	33K	5%	3W F
R5331		1-247-845-91	CARBON	3.9K	5%	1/4W
R5332		1-247-863-91	CARBON	22K	5%	1/4W
R5350		1-247-831-91	CARBON	1K	5%	1/4W
R5351		1-247-827-91	CARBON	680	5%	1/4W
R5352		1-247-829-91	CARBON	820	5%	1/4W
R5353		1-247-839-91	CARBON	2.2K	5%	1/4W
R5354		1-247-833-91	CARBON	1.2K	5%	1/4W
R5355		1-247-813-91	CARBON	180	5%	1/4W
R5356		1-249-831-91	CARBON	1K	5%	1/4W
R5357		1-202-565-81	SOLID	470	20%	1/2W
R5358		1-215-926-51	METAL OXIDE	33K	5%	3W F
R5359		1-247-863-91	CARBON	22K	5%	1/4W
R5360		1-247-845-91	CARBON	3.9K	5%	1/4W
R5361		1-247-847-91	CARBON	4.7K	5%	1/4W
R5375		1-247-867-91	CARBON	33K	5%	1/4W
R5376		1-247-855-91	CARBON	10K	5%	1/4W
R5377		1-247-857-91	CARBON	12K	5%	1/4W
R5378		1-247-855-91	CARBON	10K	5%	1/4W
R5379		1-247-873-91	CARBON	56K	5%	1/4W
R5381		1-247-837-91	CARBON	1.8K	5%	1/4W
R5382		1-202-549-81	SOLID	100	20%	1/2W
R5383		1-216-392-51	METAL OXIDE	1.8	5%	3W F
R5384		1-216-392-51	METAL OXIDE	1.8	5%	3W F
R5385		1-202-549-81	SOLID	100	20%	1/2W
R5386		1-202-884-91	SOLID	820K	20%	1/2W
R5387		1-202-884-91	SOLID	820K	20%	1/2W
R5388		1-215-911-51	METAL OXIDE	100	5%	3W F
R5389		1-249-417-91	CARBON	1K	5%	1/4W F
			< VARIABLE RESISTOR >			
RV5375		1-241-656-21	RES, ADJ, METAL FILM 110M			
RV5376		1-230-641-21	RES, ADJ, METAL GLAZE 2.2M			
			**********			
		A-1640-318-A	D BOARD, COMPLETE			
			**********			
		4-201-023-01	SPACER, INSULATING			
		4-202-373-01	SPRING, IC			
		4-382-854-11	SCREW (M3X10), P, SW (+)			
		4-931-401-01	HEAT SINK, V.OUT			
			< CAPACITOR >			
C6600	⚠	1-162-580-51	CERAMIC	0.01MF		400V
C6603		1-126-933-11	ELECT	100MF	20%	16V
C6604		1-126-767-11	ELECT	1000MF	20%	16V
C6605	⚠	1-119-888-51	CERAMIC	2200PF	20%	250V
C6606	⚠	1-119-888-51	CERAMIC	2200PF	20%	250V
C6608	⚠	1-161-964-91	CERAMIC	0.0047MF		250V
C6609	⚠	1-161-964-91	CERAMIC	0.0047MF		250V
C6610		1-162-599-12	CERAMIC	0.0047MF		250V
C6611		1-162-599-12	CERAMIC	0.0047MF		250V
C6612		1-161-744-00	CERAMIC	0.01MF		400V
C6616		1-164-625-11	CERAMIC	680PF	10%	500V
C6617		1-164-625-11	CERAMIC	680PF	10%	500V
C6618		1-136-175-00	FILM	0.68MF	5%	50V
C6619		1-136-173-00	FILM	0.47MF	5%	50V
C6620		1-136-618-11	FILM	0.047MF	5%	1.25KV
C6621		1-136-175-00	FILM	0.68MF	5%	50V
C6622		1-164-625-11	CERAMIC	680PF	10%	500V
C6623		1-136-173-00	FILM	0.47MF	5%	50V
C6624		1-126-968-11	ELECT	100MF	20%	50V
C6626		1-164-625-11	CERAMIC	680PF	10%	500V
C6627		1-164-625-11	CERAMIC	680PF	10%	500V
C6628		1-126-936-11	ELECT	3300MF	20%	16V
C6629		1-128-548-11	ELECT	4700MF	20%	25V
C6630		1-110-626-11	ELECT	330MF	20%	160V
C6631		1-128-548-11	ELECT	4700MF	20%	25V
C6632		1-128-548-11	ELECT	4700MF	20%	25V
C6633		1-126-935-11	ELECT	470MF	20%	16V
C6634		1-136-165-00	FILM	0.1MF	5%	50V
C6635		1-104-664-11	ELECT	47MF	20%	25V
C6636		1-102-129-00	CERAMIC	0.01MF	10%	50V
C6637		1-102-129-00	CERAMIC	0.01MF	10%	50V
C6638		1-137-368-11	FILM	0.0047MF	5%	50V
C6639		1-102-228-00	CERAMIC	470PF	10%	500V
C6641		1-126-967-11	ELECT	47MF	20%	50V
C6642		1-126-964-11	ELECT	10MF	20%	50V
C6647		1-104-664-11	ELECT	47MF	20%	25V
C6649		1-126-965-11	ELECT	22MF	20%	50V
C6651		1-162-599-12	CERAMIC	0.0047MF		250V
C6652		1-107-679-91	ELECT	10MF	20%	450V
C6653		1-126-968-11	ELECT	100MF	20%	50V
C6654		1-162-117-00	CERAMIC	100PF	10%	500V
C6655		1-109-879-11	CERAMIC	22PF	5%	2KV
C6656		1-126-967-11	ELECT	47MF	20%	50V
C6657		1-126-941-11	ELECT	470MF	20%	25V
C6658		1-104-665-11	ELECT	100MF	20%	25V
C6659		1-104-665-11	ELECT	100MF	20%	25V
C6661		1-117-753-11	ELECT(BLOCK)	470MF	20%	450V
C6662		1-136-165-00	FILM	0.1MF	5%	50V
C6664		1-136-153-00	FILM	0.01MF	5%	50V
C6665		1-136-165-00	FILM	0.1MF	5%	50V
C6666		1-136-165-00	FILM	0.1MF	5%	50V
C6667		1-126-933-11	ELECT	100MF	20%	16V
C6668		1-126-933-11	ELECT	100MF	20%	16V
C6669		1-136-165-00	FILM	0.1MF	5%	50V

The components identified by shading and marked ⚠ are critical for safety
Replace only with the part number specified.

D

REF. NO.	PART.NO	DESCRIPTION			REMARK
C6670	1-136-165-00	FILM	0.1MF	5%	50V
C6671	1-104-664-11	ELECT	47MF	20%	16V
C6672	1-104-664-11	ELECT	47MF	20%	16V
C6673	1-104-664-11	ELECT	47MF	20%	16V
C6677	1-136-165-00	FILM	0.1MF	5%	50V
C6679	1-130-495-00	FILM	0.1MF	5%	50V
C6680	1-137-370-11	FILM	0.01MF	5%	50V
C6681	1-126-964-11	ELECT	10MF	20%	50V
C6682	1-535-143-61	LEAD JUMPER (5.0MM)			
C6700	1-102-129-00	CERAMIC	0.01MF	10%	50V
C6703	1-128-527-11	ELECT	330MF	20%	25V
C6704	1-126-968-11	ELECT	100MF	20%	50V
C6705	1-128-527-11	ELECT	330MF	20%	25V
C6706	1-106-228-00	MYLAR	0.22MF	10%	100V
C6707	1-129-702-00	FILM	0.001MF	10%	400V
C6708	1-106-220-00	MYLAR	0.1MF	10%	100V
C6709	1-102-129-00	CERAMIC	0.01MF	10%	50V
C6710	1-130-785-11	MYLAR	0.47MF	10%	100V
C6727	1-102-228-00	CERAMIC	470PF	10%	500V
C6801	1-104-664-11	ELECT	47MF	20%	25V
C6802	1-126-960-11	ELECT	1MF	20%	50V
C6803	1-126-960-11	ELECT	1MF	20%	50V
C6804	1-102-114-00	CERAMIC	470PF	10%	50V
C6805	1-102-114-00	CERAMIC	470PF	10%	50V
C6808	1-102-030-00	CERAMIC	330PF	10%	500V
C6809	1-102-030-00	CERAMIC	330PF	10%	500V
C6810	1-107-368-11	FILM	0.047MF	10%	200V
C6811	1-107-368-11	FILM	0.047MF	10%	200V
C6812	1-162-131-11	CERAMIC	220PF	10%	2KV
C6813	1-162-558-51	CERAMIC	100PF	10%	2KV
C6814	1-117-640-11	FILM	6800PF	3%	1.2KV
C6815	1-117-835-11	FILM	6200PF	3%	2KV
C6816	1-137-364-11	FILM	0.001MF	5%	50V
C6817	1-125-893-11	FILM	680PF	3%	2KV
C6818	1-125-893-11	FILM	680PF	3%	2KV
C6819	1-125-893-11	FILM	680PF	3%	2KV
C6820	1-125-893-11	FILM	680PF	3%	2KV
C6824	1-107-846-11	FILM	0.1MF	5%	200V
C6825	1-115-352-81	FILM	0.1MF	5%	250V
C6826	1-115-518-81	FILM	0.47MF	5%	250V
C6827	1-115-511-81	FILM	0.12MF	5%	250V
C6828	1-127-680-91	CERAMIC		2%	100V
C6829	1-127-680-91	CERAMIC		2%	100V
C6830	1-107-655-11	ELECT	47MF	20%	250V
C6831	1-102-228-00	CERAMIC	470PF	10%	500V
C6832	1-126-941-11	ELECT	470MF	20%	25V
C6833	1-126-941-11	ELECT	470MF	20%	25V
C6834	1-102-228-00	CERAMIC	470PF	10%	500V
C6835	1-102-228-00	CERAMIC	470PF	10%	500V
C6836	1-123-024-21	ELECT	33MF		160V
C6837	1-106-375-12	MYLAR	0.022MF	10%	250V

REF. NO.	PART.NO	DESCRIPTION			REMARK
C6840	1-137-370-91	FILM	0.01MF	5%	50V
C6841	1-104-660-91	ELECT	47MF	20%	16V
C6842	1-136-207-11	FILM	0.047MF	10%	400V
C6843	1-131-347-00	TANTALUM	1MF	10%	25V
C6851	1-162-131-11	CERAMIC	220PF	10%	2KV
C6852	1-162-129-00	CERAMIC	150PF	10%	2KV
C6853	1-137-536-11	FILM	0.0022MF	5%	630V
C6855	1-136-205-11	FILM	0.022MF	10%	400V
C6856	1-102-030-00	CERAMIC	330PF	10%	500V
C6857	1-130-785-11	FILM	0.47MF	10%	100V
C6861	1-137-364-11	FILM	0.001MF	5%	50V
C6862	1-137-364-11	FILM	0.001MF	5%	50V
C6863	1-162-134-11	CERAMIC	470PF	10%	2KV

< CONNECTOR >

CN6100	1-785-802-11	20PIN CONNECTOR	
CN6101	1-785-802-11	20PIN CONNECTOR	
CN6102	1-785-802-11	20PIN CONNECTOR	
CN6500	1-508-766-00	PIN, CONNECTOR (5MM PITCH) 4P	
CN6600	1-695-299-11	CONNECTOR, BOARD TO BOARD 50P	
CN6611	*1-785-270-11	PIN, DY CONNECTOR (PC BOARD)	
CN6620 ⚠	1-508-765-00	PIN, CONNECTOR (5MM PITCH) 3P	
CN6655	1-695-915-11	TAB (CONTACT)	
CN6666 ⚠	1-508-786-00	PIN, CONNECTOR (5MM PITCH) 2P	
CN6677	1-695-915-21	TAB (CONTACT)	
CN6688	1-695-915-21	TAB (CONTACT)	
CN6700 ⚠	*1-691-291-11	PIN, CONNECTOR (PC BOARD) 5P	

< DIODE >

D6600	8-719-911-19	DIODE 1SS119-25TD	
D6601	8-719-510-64	DIODE DINL20U-TR	
D6602	8-719-109-89	DIODE MTZJ-T-77-5.6B	
D6603	8-719-911-19	DIODE 1SS119-25TD	
D6604	8-719-510-53	DIODE D4SB60L-F	
D6610	8-719-510-64	DIODE S2LA20F	
D6613	8-719-911-19	DIODE 1SS119-25TD	
D6615	8-719-911-19	DIODE 1SS119-25TD	
D6616	8-719-510-12	DIODE D10SC4M-F	
D6617	8-719-500-71	DIODE D8LC40F	
D6618	8-719-047-31	DIODE RBA-402L	
D6619	8-719-510-12	DIODE D10SC4M-F	
D6620	8-719-510-09	DIODE D10SC6M-F	
D6621	8-719-991-33	DIODE 1SS133T-77	
D6622	8-719-991-33	DIODE 1SS133T-77	
D6623	8-719-911-19	DIODE 1SS119-25TD	
D6624	8-719-991-33	DIODE 1SS133T-77	
D6625	8-719-991-33	DIODE 1SS133T-77	
D6627	8-719-982-27	DIODE MTZJ-T-77-33C	
D6628	8-719-109-97	DIODE MTZJ-T-77-6.8	
D6629	8-719-991-33	DIODE 1SS133T-77	
D6630	8-719-991-33	DIODE 1SS133T-77	

The components identified by shading and marked ⚠ are critical for safety
Replace only with the part number specified.

D

REF. NO.	PART.NO	DESCRIPTION	REMARK
D6651	8-719-068-00	DIODE ERC04-06SE	
D6652	8-719-923-78	DIODE MTZJ-T-77-12	
D6653	8-719-510-64	DIODE DINL20U-TR	
D6654	8-719-059-23	DIODE P6KE200AG23	
D6655	8-719-979-64	DIODE UF4005PKG23	
D6656	8-719-510-64	DIODE DINL20U-TR	
D6658	8-719-068-00	DIODE ERC04-06SE	
D6659	8-719-510-64	DIODE DINL20U-TR	
D6676	8-719-991-33	DIODE 1SS133T-77	
D6677	8-719-921-40	DIODE MTZJ-T-77-4.7B	
D6678	8-719-921-40	DIODE MTZJ-T-77-4.7B	
D6679	8-719-991-33	DIODE 1SS133T-77	
D6681	8-719-991-33	DIODE 1SS133T-77	
D6700	8-719-908-03	DIODE GP08DPKG23	
D6701	8-719-110-41	DIODE MTZJ-T-77-15B	
D6803	8-719-908-03	DIODE RGP08DPKG23	
D6804	1-535-143-11	LEAD JUMPER (10.0MM)	
D6805	8-719-302-43	DIODE RGP10GPKG23	
D6806	8-719-979-85	DIODE REP15GPKG23	
D6807	8-719-510-73	DIODE S3L20UF4	
D6808	8-719-510-73	DIODE S3L20UF4	
D6809	8-719-991-33	DIODE 1SS133T	
D6810	8-719-923-88	DIODE MTZJ-15B	
D6811	8-719-923-88	DIODE MTZJ-15B	
D6812	8-719-991-33	DIODE 1SS133T-77	
D6813	8-719-923-88	DIODE MTZJ-15B	
D6851	8-719-970-87	DIODE ERA38-06TP1	
D6852	8-719-970-87	DIODE ERA38-06TP1	
		< FERRITE BEAD >	
FB6602	1-410-396-41	FERRITE 0.45UH	
FB6603	1-410-396-41	FERRITE 0.45UH	
		< IC >	
IC6600	1-810-051-11	POWER MODULE DM-48	
IC6604	8-729-045-40	TRANSISTOR MX0842B-F	
IC6651	8-759-468-89	IC TOP209P	
IC6652	8-759-604-39	IC L78M12CV	
IC6653	8-759-544-13	IC KA78R09TU	
IC6654	8-759-457-44	IC KA78R05TU	
IC6667	8-759-908-15	IC TL431CZ	
IC6676	8-759-908-15	IC TL431CZ	
IC6700	8-759-192-71	IC STV9379	
IC6801	8-759-103-93	IC LM393P	
		< COIL >	
L6602	1-412-529-11	INDUCTOR 22UH	
L6603	1-412-529-11	INDUCTOR 22UH	
L6604	1-412-525-31	INDUCTOR 10UH	
L6605	1-412-525-31	INDUCTOR 10UH	
L6606	1-412-525-31	INDUCTOR 10UH	
L6607	1-412-525-31	INDUCTOR 10UH	
L6651	1-414-183-41	INDUCTOR 10UH	
L6700	1-412-524-11	INDUCTOR 8.2UH	
L6801	1-412-519-11	INDUCTOR 3.3UH	
L6802	1-412-519-11	INDUCTOR 3.3UH	
L6803	1-412-519-11	INDUCTOR 3.3UH	
L6805	1-408-947-00	INDUCTOR 2.2MMH	
L6806	1-410-397-21	FERRITE 1.1UH	
L6807	1-410-397-21	FERRITE 1.1UH	
L6808	1-406-675-11	INDUCTOR 0UH	
		< FILTER >	
LF6603	1-406-659-21	INDUCTOR 0UH	
LF6604	1-406-659-21	INDUCTOR 0UH	
LF6801	1-406-985-11	INDUCTOR 0UH	
LF6851	1-406-674-11	INDUCTOR 0UH	
		< IC LINK >	
PS6601 ⚠	1-801-550-21	PROTECTOR MODULE 2.5A MP250	
PS6602 ⚠	1-801-550-21	PROTECTOR MODULE 2.5A MP250	
PS6603 ⚠	1-801-549-21	PROTECTOR MODULE 2.5A MP250	
PS6604 ⚠	1-801-550-21	PROTECTOR MODULE 2.5A MP250	
PS6605 ⚠	1-801-550-21	PROTECTOR MODULE 2.5A MP250	
		< TRANSISTOR >	
Q6600	8-729-046-47	TRANSISTOR KSC2500-BTA	
Q6602	8-729-026-41	TRANSISTOR 2SA933AS-RT	
Q6603	8-729-119-78	TRANSISTOR 2SC1740S-RT	
Q6605	8-729-046-47	TRANSISTOR KSC2500-BTA	
Q6606	8-729-029-56	TRANSISTOR DTA144ESA-TP	
Q6607	8-729-119-78	TRANSISTOR 2SC1740S-RT	
Q6608	8-729-029-66	TRANSISTOR DTC114ESA	
Q6651	8-729-026-41	TRANSISTOR 2SA933AS-RT	
Q6652	8-729-029-86	TRANSISTOR DTC124ES-TP	
Q6667	8-729-026-41	TRANSISTOR 2SA933AS-RT	
Q6676	8-729-119-78	TRANSISTOR 2SC1740S-RT	
Q6677	8-729-119-78	TRANSISTOR 2SC1740S-RT	
Q6678	8-729-119-78	TRANSISTOR 2SC1740S-RT	
Q6679	8-729-026-41	TRANSISTOR 2SA933AS-RT	
Q6680	8-729-029-66	TRANSISTOR DTC114ESA-TP	
Q6681	8-729-029-66	TRANSISTOR DTC114ESA-TP	
Q6700	8-729-039-68	TRANSISTOR IRF620	
Q6801	8-729-119-80	TRANSISTOR 2SC2688-LK	
Q6802	8-729-119-80	TRANSISTOR 2SC2688-LK	
Q6803	8-729-046-18	TRANSISTOR 2SC5480-01	
Q6804	8-729-046-18	TRANSISTOR 2SC5480-01	
Q6805	8-729-038-83	TRANSISTOR 2SK2251-01-F19	
Q6806	8-729-930-91	TRANSISTOR IRF740	
Q6807	8-729-030-03	TRANSISTOR DTC144ESA	
Q6809	8-729-119-78	TRANSISTOR 2SC1740S-RT	
Q6810	8-729-026-41	TRANSISTOR 2SA933AS-RT	
Q6851	8-729-043-95	TRANSISTOR 2SC3840K	

The components identified by shading and marked ⚠ are critical for safety
Replace only with the part number specified.

D

< RESISTOR >

REF. NO.		PART.NO	DESCRIPTION			REMARK
R6601	⚠	1-202-968-11	CEMENTED	1.2	5%	10W
R6603		1-249-430-11	CARBON	12K	5%	1/4W
R6604		1-249-421-11	CARBON	2.2K	5%	1/4W
R6605		1-249-417-11	CARBON	1K	5%	1/4W F
R6606	⚠	1-202-968-11	CEMENTED	1.2	5%	10W
R6607	⚠	1-202-968-11	CEMENTED	1.2	5%	10W
R6608	⚠	1-202-968-11	CEMENTED	1.2	5%	10W
R6611		1-260-125-11	CARBON	150K	5%	1/2W
R6612		1-260-125-11	CARBON	150K	5%	1/2W
R6613		1-216-369-00	METAL OXIDE	1	5%	2W F
R6614		1-260-125-11	CARBON	150K	5%	1/2W
R6615		1-260-125-11	CARBON	150K	5%	1/2W
R6616		1-216-369-00	METAL OXIDE	1	5%	2W F
R6619		1-249-425-11	CARBON	4.7K	5%	1/4W
R6620		1-249-443-11	CARBON	0.47	5%	1/4W F
R6624		1-249-425-11	CARBON	4.7K	5%	1/4W
R6625		1-249-429-11	CARBON	10K	5%	1/4W
R6626		1-247-807-31	CARBON	100	5%	1/4W
R6627		1-249-429-11	CARBON	10K	5%	1/4W
R6628		1-260-129-11	CARBON	330K	5%	1/2W
R6629		1-260-129-11	CARBON	330K	5%	1/2W
R6630		1-249-417-11	CARBON	1K	5%	1/4W
R6631		1-249-425-11	CARBON	4.7K	5%	1/4W
R6632		1-207-905-00	WIREWOUND	0.27	10%	2W F
R6633		1-249-429-11	CARBON	10K	5%	1/4W
R6635		1-535-143-61	LEAD JUMPER (5.0MM)			
R6637		1-249-421-11	CARBON	2.2K	5%	1/4W
R6638		1-247-895-91	CARBON	470K	5%	1/4W
R6639		1-249-416-11	CARBON	820	5%	1/4W
R6640		1-249-417-11	CARBON	1K	5%	1/4W
R6641		1-260-127-11	CARBON	220K	5%	1/2W
R6642		1-249-389-91	CARBON	4.7	5%	1/4W F
R6643		1-249-417-11	CARBON	1K	5%	1/4W F
R6644		1-249-429-11	CARBON	10K	5%	1/4W
R6645		1-260-131-11	CARBON	470K	5%	1/2W
R6646		1-249-429-11	CARBON	10K	5%	1/4W
R6647		1-249-410-11	CARBON	270	5%	1/4W
R6648		1-247-863-91	CARBON	22K	5%	1/4W
R6649		1-215-926-00	METAL OXIDE	33K	5%	3W F
R6651		1-247-791-91	CARBON	22	5%	1/4W
R6652		1-249-389-11	CARBON	4.7	5%	1/4W F
R6653		1-249-421-11	CARBON	2.2K	5%	1/4W
R6655		1-249-429-11	CARBON	10K	5%	1/4W
R6656	⚠	1-218-265-11	METAL	8.2M	5%	1W
R6657		1-215-419-91	METAL	820	1%	1/4W
R6666		1-202-933-61	FUSIBLE	0.1	10%	1/2W F
R6667		1-215-441-00	METAL	6.8K	1%	1/4W
R6668		1-249-429-11	CARBON	10K	5%	1/4W
R6669		1-249-413-11	CARBON	470	5%	1/4W
R6676		1-249-417-11	CARBON	1K	5%	1/4W
R6677		1-249-417-11	CARBON	1K	5%	1/4W
R6678		1-249-417-11	CARBON	1K	5%	1/4W
R6679		1-215-479-00	METAL	270K	1%	1/4W
R6681		1-215-467-00	METAL	82K	1%	1/4W
R6682		1-215-447-00	METAL	12K	1%	1/4W
R6683		1-215-429-00	METAL	2.2K	1%	1/4W
R6684		1-247-807-31	CARBON	100	5%	1/4W
R6685		1-249-417-11	CARBON	1K	5%	1/4W
R6686		1-215-449-00	METAL	15K	1%	1/4W
R6687		1-249-431-11	CARBON	15K	5%	1/4W
R6688		1-249-417-11	CARBON	1K	5%	1/4W
R6700		1-215-441-00	METAL	6.8K	1%	1/4W
R6701		1-215-437-91	METAL	4.7K	1%	1/4W
R6702		1-215-441-00	METAL	6.8K	1%	1/4W
R6703		1-215-437-91	METAL	4.7K	1%	1/4W
R6704		1-249-383-11	CARBON	1.5	5%	1/4W F
R6705		1-247-791-91	CARBON	22	5%	1/4W
R6707		1-215-888-00	METAL OXIDE	220	5%	2W F
R6708		1-214-798-21	METAL	1.8	1%	1/2W
R6709		1-214-798-21	METAL	1.8	1%	1/2W
R6710		1-247-843-11	CARBON	3.3K	5%	1/4W
R6801		1-215-440-00	METAL	6.2K	1%	1/4W
R6802		1-214-915-00	METAL	120K	1%	1/2W
R6803		1-249-421-11	CARBON	2.2K	5%	1/4W
R6804		1-247-807-31	CARBON	100	5%	1/4W
R6805		1-247-807-31	CARBON	100	5%	1/4W
R6806		1-249-411-11	CARBON	330	5%	1/4W
R6807		1-249-411-11	CARBON	330	5%	1/4W
R6808		1-260-340-11	CARBON	10K	5%	1/2W
R6809		1-260-340-11	CARBON	10K	5%	1/2W
R6810		1-215-920-51	METAL OXIDE	3.3K	5%	3W F
R6811		1-216-461-00	METAL OXIDE	5.6K	5%	2W F
R6812		1-215-895-11	METAL OXIDE	3.3K	5%	2W F
R6813		1-215-895-11	METAL OXIDE	3.3K	5%	2W F
R6814		1-215-880-00	METAL OXIDE	10	5%	2W F
R6815		1-215-880-00	METAL OXIDE	10	5%	2W F
R6816		1-216-361-00	METAL OXIDE	0.22	5%	2W F
R6817		1-216-361-00	METAL OXIDE	0.22	5%	2W F
R6818		1-247-807-31	CARBON	100	5%	1/4W
R6819		1-247-807-31	CARBON	100	5%	1/4W
R6831		1-260-124-11	CARBON	120K	5%	1/2W
R6832		1-216-434-11	METAL OXIDE	1.8K	5%	1W F
R6833		1-202-972-61	FUSIBLE	1	5%	1/4W F
R6834		1-249-377-11	CARBON	0.47	5%	1/4W F
R6835		1-249-377-11	CARBON	0.47	5%	1/4W F
R6836		1-249-431-11	CARBON	15K	5%	1/4W
R6837		1-215-919-51	FILM	2.2K	5%	3W F
R6838		1-260-119-11	CARBON	47K	5%	1/2W
R6839		1-215-919-51	FILM	2.2K	5%	3W F
R6840		1-247-843-11	CARBON	3.3K	5%	1/4W
R6842		1-260-123-91	CARBON	100K	5%	1/2W

D E

The components identified by shading and marked ⚠ are critical for safety
Replace only with the part number specified.

REF. NO.	PART.NO	DESCRIPTION				REMARK
R6843	1-247-855-91	CARBON	10K	5%	1/4W	
R6844	1-247-879-91	CARBON	100K	5%	1/4W	
R6845	1-247-863-91	CARBON	22K	5%	1/4W	
R6851	1-260-123-91	CARBON	100K	5%	1/2W	
R6852	1-260-123-91	CARBON	100K	5%	1/2W	
R6853	1-260-123-91	CARBON	100K	5%	1/2W	
R6854	1-249-417-11	CARBON	1K	5%	1/4W	
R6856	1-216-485-11	METAL OXIDE	5.6K	5%	3W	F
R6857	1-216-485-11	METAL OXIDE	5.6K	5%	3W	F
R6858	1-216-485-11	METAL OXIDE	5.6K	5%	3W	F
R6859	1-216-485-11	METAL OXIDE	5.6K	5%	3W	F
R6880	1-215-436-00	METAL	4.3K	1%	1/4W	
R6885	1-215-493-00	METAL	1M	1%	1/4W	
R6886	1-215-477-00	METAL	220K	1%	1/4W	
R6887	1-215-461-00	METAL	47K	1%	1/4W	
R6888	1-249-441-11	CARBON	100K	5%	1/4W	
R6889	1-249-421-11	CARBON	2.2K	5%	1/4W	
R6890	1-247-887-00	CARBON	220K	5%	1/4W	
R6891	1-247-895-91	CARBON	470K	5%	1/4W	
R6892	1-249-437-11	CARBON	47K	5%	1/4W	
R6893	1-249-429-11	CARBON	10K	5%	1/4W	
R6894	1-535-303-00	LEAD, JUMPER (5.0MM)				
R6895	1-249-443-11	CARBON	0.47	5%	1/4W	F
R6896	1-249-443-11	CARBON	0.47	5%	1/4W	F
		< RELAY >				
RY6601	⚠ 1-755-266-11	RELAY, AC POWER				
RY6602	⚠ 1-755-167-11	RELAY, AC POWER				
		< TRANSFORMER >				
T6600	⚠ 1-431-616-11	TRANSFORMER, CONVERTER				
T6601	⚠ 1-433-516-11	TRANSFORMER, CONVERTER				
T6651	⚠ 1-431-732-11	TRANSFORMER, CONVERTER (SRT)				
T6801	1-433-489-11	TRANSFORMER, FERRITE (HDT)				
T6802	1-433-489-11	TRANSFORMER, FERRITE (HDT)				
T6804	⚠ 1-453-272-11	TRANSFORMER ASSY, FLYBACK (NX-4512/U2B4)				
T6805	1-429-741-11	TRANSFORMER, DRIVE				
T6852	1-426-896-11	TRANSFORMER, FERRITE (DFT)				
		< THERMISTOR >				
TH6600	⚠ 1-809-827-11	THERMISTOR, POSITIVE				
TH6700	1-800-193-00	THERMISTOR				

****

*A-1640-319-A E BOARD, COMPLETE
****

< CAPACITOR >

C4316	1-104-664-11	ELECT	47MF		20%	25V
C4317	1-164-004-11	CERAMIC CHIP	0.1MF		10%	25V
C4318	1-164-004-11	CERAMIC CHIP	0.1MF		10%	25V
C4319	1-164-004-11	CERAMIC CHIP	0.1MF		10%	25V
C4320	1-164-004-11	CERAMIC CHIP	0.1MF		10%	25V
C4321	1-164-004-11	CERAMIC CHIP	0.1MF		10%	25V
C4322	1-164-004-11	CERAMIC CHIP	0.1MF		10%	25V
C4324	1-164-004-11	CERAMIC CHIP	0.1MF		10%	25V
C4325	1-163-093-91	CERAMIC CHIP	10PF			
C4329	1-126-963-11	ELECT	4.7MF		20%	50V
C4330	1-136-165-00	FILM	0.1MF		5%	50V
C4331	1-126-959-11	ELECT	0.47MF		20%	50V
C4332	1-164-004-11	CERAMIC CHIP	0.1MF		10%	25V
C4333	1-164-004-11	CERAMIC CHIP	0.1MF		10%	25V
C4334	1-126-967-11	ELECT	47MF		20%	50V
C4336	1-126-967-11	ELECT	47MF		20%	50V
C4338	1-164-004-11	CERAMIC CHIP	0.1MF		10%	25V
C4340	1-126-967-11	ELECT	47MF		20%	50V
C4342	1-163-021-91	CERAMIC CHIP	0.01MF		10%	50V
C4343	1-164-004-11	CERAMIC CHIP	0.1MF		10%	25V
C4344	1-163-809-11	CERAMIC CHIP	0.047MF		10%	25V
C4345	1-126-967-11	ELECT	47MF		20%	50V
C4346	1-164-004-11	CERAMIC CHIP	0.1MF		10%	25V
C4347	1-164-004-11	CERAMIC CHIP	0.1MF		10%	25V
C4348	1-164-004-11	CERAMIC CHIP	0.1MF		10%	25V
C4349	1-164-004-11	CERAMIC CHIP	0.1MF		10%	25V
C4350	1-126-963-91	CERAMIC CHIP	0.1MF		20%	25V
C4351	1-163-013-91	CERAMIC CHIP	1000PF		10%	50V
C4352	1-126-967-11	ELECT	47MF		20%	50V
C4353	1-107-823-11	CERAMIC CHIP	0.47MF		10%	16V
C4354	1-107-823-11	CERAMIC CHIP	0.47MF		10%	16V
C4355	1-164-004-11	CERAMIC CHIP	0.1MF		10%	25V
C4356	1-164-004-11	CERAMIC CHIP	0.1MF		10%	25V
C4357	1-163-009-11	CERAMIC CHIP	0.001MF		10%	50V
C4358	1-164-004-11	CERAMIC CHIP	0.1MF		10%	25V
C4359	1-164-161-11	CERAMIC CHIP	0.0022MF		10%	50V
C4360	1-126-963-91	ELECT	4.7MF		20%	50V
C4362	1-164-004-11	CERAMIC CHIP	0.1MF		10%	25V
C4363	1-126-967-11	ELECT	47MF		20%	50V
C4364	1-126-967-11	ELECT	47MF		20%	50V
C4369	1-164-004-11	CERAMIC CHIP	0.1MF		10%	25V
C4370	1-126-967-11	ELECT	47MF		20%	50V
C4371	1-164-004-11	CERAMIC CHIP	0.1MF		10%	25V
C4377	1-126-960-11	ELECT	1MF		20%	50V
C4380	1-163-005-11	CERAMIC CHIP	470PF		10%	50V
C4381	1-163-249-11	CERAMIC CHIP	82PF		5%	50V
C4518	1-162-638-11	CERAMIC CHIP	1MF			16V

< CONNECTOR >

CN4101	1-695-301-11	CONNECTOR, BOARD TO BOARD 40P
CN4500	1-564-511-11	PLUG, CONNECTOR 8P
CN4502	*1-568-878-51	PIN, CONNECTOR 3P

REF. NO.	PART.NO	DESCRIPTION	REMARK
		< DIODE >	
D4304	8-719-923-60	DIODE MTZJ-T-77-9.1A	
D4305	8-719-923-60	DIODE MTZJ-T-77-9.1A	
D4311	8-719-914-43	DIODE DAN202K-T-146	
D4312	8-719-914-43	DIODE DAN202K-T-146	
D4313	8-719-401-63	DIODE MA3062M-TX	
		< FERRITE BEAD >	
FB4387	1-216-295-91	SHORT 0	
FB4388	1-216-295-91	SHORT 0	
FB4389	1-216-295-91	SHORT 0	
		< IC >	
IC4301	8-752-086-23	IC CXA2100Q-TL	
		< COIL >	
L4301	1-414-183-41	INDUCTOR 10UH	
L4302	1-414-183-41	INDUCTOR 10UH	
L4303	1-414-183-41	INDUCTOR 10UH	
L4304	1-414-183-41	INDUCTOR 10UH	
L4305	1-414-183-41	INDUCTOR 10UH	
L4306	1-414-183-41	INDUCTOR 10UH	
L4308	1-408-609-41	INDUCTOR 33UH	
L4309	1-408-609-41	INDUCTOR 33UH	
		< TRANSISTOR >	
Q4304	8-729-216-22	TRANSISTOR 2SA1037K-T-146-R	
Q4307	8-729-216-22	TRANSISTOR 2SA1037K-T-146-R	
Q4308	8-729-216-22	TRANSISTOR 2SA1037K-T-146-R	
Q4309	8-729-216-22	TRANSISTOR 2SA1037K-T-146-R	
Q4310	8-729-216-22	TRANSISTOR 2SA1037K-T-146-R	
Q4315	1-801-806-11	TRANSISTOR DTC144EKA-T146	
Q4316	8-729-620-06	TRANSISTOR 2SC2412K-T-146-R	
Q4317	8-729-900-53	TRANSISTOR DTC114EKA-T146	
Q4318	8-729-216-22	TRANSISTOR 2SA1037K-T-146-R	
		< RESISTOR >	
R4301	1-216-025-91	RES,CHIP 100 5%	1/10W
R4302	1-216-025-91	RES,CHIP 100 5%	1/10W
R4303	1-216-025-91	RES,CHIP 100 5%	1/10W
R4304	1-216-025-91	RES,CHIP 100 5%	1/10W
R4305	1-216-025-91	RES,CHIP 100 5%	1/10W
R4306	1-216-025-91	RES,CHIP 100 5%	1/10W
R4313	1-216-065-91	RES,CHIP 4.7K 5%	1/10W
R4314	1-216-057-00	RES,CHIP 2.2K 5%	1/10W
R4331	1-216-073-00	RES,CHIP 10K 5%	1/10W
R4332	1-216-073-00	RES,CHIP 10K 5%	1/10W
R4333	1-216-073-00	RES,CHIP 10K 5%	1/10W
R4334	1-216-025-91	RES,CHIP 100 5%	1/10W
R4335	1-216-025-91	RES,CHIP 100 5%	1/10W
R4336	1-216-025-91	RES,CHIP 100 5%	1/10W
R4337	1-216-025-91	RES,CHIP 100 5%	1/10W
R4339	1-216-049-91	RES,CHIP 1K 5%	1/10W
R4340	1-216-111-00	RES,CHIP 390K 5%	1/10W
R4341	1-216-295-91	SHORT 0	
R4343	1-216-025-91	RES,CHIP 100 5%	1/10W
R4344	1-216-025-91	RES,CHIP 100 5%	1/10W
R4345	1-216-677-11	METAL CHIP 12K 0.50%	1/10W
R4346	1-216-683-11	METAL CHIP 22K 0.50%	1/10W
R4347	1-216-025-91	RES,CHIP 100 5%	1/10W
R4348	1-216-025-91	RES,CHIP 100 5%	1/10W
R4350	1-216-025-91	RES,CHIP 100 5%	1/10W
R4354	1-216-675-11	METAL CHIP 10K 0.50%	1/10W
R4358	1-216-071-00	RES,CHIP 8.2K 5%	1/10W
R4359	1-216-041-00	RES,CHIP 470 5%	1/10W
R4360	1-216-061-90	RES,CHIP 22K 5%	1/10W
R4361	1-216-133-00	RES,CHIP 3.3M 5%	1/10W
R4363	1-216-025-91	RES,CHIP 100 5%	1/10W
R4365	1-216-025-91	RES,CHIP 100 5%	1/10W
R4366	1-216-025-91	RES,CHIP 100 5%	1/10W
R4367	1-216-025-91	RES,CHIP 100 5%	1/10W
R4370	1-216-077-00	RES,CHIP 15K 5%	1/10W
R4371	1-216-069-00	RES,CHIP 6.8K 5%	1/10W
R4372	1-216-049-91	RES,CHIP 1K 5%	1/10W
R4373	1-216-073-00	RES,CHIP 10K 5%	1/10W
R4374	1-216-049-91	RES,CHIP 1K 5%	1/10W
R4375	1-216-049-91	RES,CHIP 1K 5%	1/10W
R4376	1-216-049-91	RES,CHIP 1K 5%	1/10W
R4377	1-216-049-91	RES,CHIP 1K 5%	1/10W
R4378	1-216-101-00	RES,CHIP 150K 5%	1/10W
R4380	1-216-073-00	RES,CHIP 10K 5%	1/10W
R4382	1-216-073-00	RES,CHIP 10K 5%	1/10W
R4384	1-216-025-91	RES,CHIP 100 5%	1/10W
R4387	1-216-025-91	RES,CHIP 100 5%	1/10W
R4388	1-216-025-91	RES,CHIP 100 5%	1/10W
R4389	1-216-025-91	RES,CHIP 100 5%	1/10W
R4395	1-216-295-91	SHORT 0	
R4396	1-216-295-91	SHORT 0	
R4398	1-216-025-91	RES,CHIP 100 5%	1/10W
R4401	1-216-099-91	RES,CHIP 120K 5%	1/10W
R4402	1-216-129-00	RES,CHIP 2.2M 5%	1/10W
R4403	1-216-073-00	RES,CHIP 10K 5%	1/10W
R4404	1-216-073-00	RES,CHIP 10K 5%	1/10W
R4405	1-216-689-11	RES,CHIP 39K 5%	1/10W
R4406	1-216-105-91	RES,CHIP 220K 5%	1/10W
R4407	1-216-091-00	RES,CHIP 56K 5%	1/10W
R4504	1-216-295-91	SHORT 0	
R4505	1-216-295-91	SHORT 0	
R4506	1-216-295-91	SHORT 0	
R4507	1-216-129-91	RES,CHIP 2.2M 5%	1/10W
R4518	1-216-025-91	RES,CHIP 100 5%	1/10W
R4519	1-216-025-91	RES,CHIP 100 5%	1/10W

E D1

REF. NO.	PART.NO	DESCRIPTION			
R4520	1-216-295-91	SHORT	0		
R4521	1-216-295-91	SHORT	0		
R4522	1-216-295-91	SHORT	0		
R4523	1-216-295-91	SHORT	0		
		< CRYSTAL >			
X4300	1-767-127-11	VIBRATOR, CERAMIC			
**********					
	A-1640-320-A	D1 BOARD, COMPLETE			
		**********			
	4-382-854-11	SCREW (M3X10), P, SW (+)			
		< CAPACITOR >			
C6100	1-136-165-00	FILM	0.1MF	5%	50V
C6101	1-136-165-00	FILM	0.1MF	5%	50V
C6102	1-136-165-00	FILM	0.1MF	5%	50V
C6103	1-163-205-00	CERAMIC CHIP	0.001MF	5%	50V
C6104	1-163-205-00	CERAMIC CHIP	0.001MF	5%	50V
C6105	1-126-967-11	ELECT	47MF	20%	50V
C6106	1-163-133-00	CERAMIC CHIP	470PF	5%	50V
C6108	1-163-021-91	CERAMIC CHIP	0.01MF	10%	50V
C6109	1-126-967-11	ELECT	47MF	20%	50V
C6110	1-126-967-11	ELECT	47MF	20%	50V
C6111	1-126-967-11	ELECT	47MF	20%	50V
C6112	1-163-037-11	CERAMIC CHIP	0.022MF	10%	50V
C6113	1-163-021-91	CERAMIC CHIP	0.01MF	10%	50V
C6114	1-126-964-11	ELECT	10MF	20%	50V
C6115	1-163-005-11	CERAMIC CHIP	470PF	10%	50V
C6116	1-163-275-11	CERAMIC CHIP	0.001MF	5%	50V
C6117	1-163-275-11	CERAMIC CHIP	0.001MF	5%	50V
C6119	1-163-021-91	CERAMIC CHIP	0.01MF	10%	50V
C6121	1-126-964-11	ELECT	10MF	20%	50V
C6122	1-126-967-11	ELECT	47MF	20%	50V
C6125	1-163-017-00	CERAMIC CHIP	0.0047MF	10%	50V
C6126	1-163-809-11	CERAMIC CHIP	0.047MF	10%	25V
C6127	1-163-021-91	CERAMIC CHIP	0.01MF	10%	50V
C6128	1-163-017-00	CERAMIC CHIP	0.0047MF	10%	50V
C6129	1-115-339-91	CERAMIC CHIP	0.1MF	10%	50V
C6130	1-163-259-91	CERAMIC CHIP	220PF	5%	50V
C6131	1-126-964-11	ELECT	10MF	20%	50V
C6132	1-163-259-91	CERAMIC CHIP	220PF	5%	50V
C6199	1-163-229-11	CERAMIC CHIP	12PF	5%	50V
C6207	1-126-967-11	ELECT	47MF	20%	50V
C6208	1-126-967-11	ELECT	47MF	20%	50V
C6209	1-163-133-00	CERAMIC CHIP	470PF	5%	50V
C6210	1-163-009-11	CERAMIC CHIP	0.001MF	10%	50V
C6250	1-104-664-11	ELECT	47MF	20%	16V
C6253	1-115-339-11	CERAMIC CHIP	0.1MF	10%	50V
C6254	1-136-177-00	FILM	1MF	5%	50V
C6255	1-136-177-00	FILM	1MF	5%	50V
C6256	1-163-117-00	CERAMIC CHIP	100PF	5%	50V
C6257	1-115-339-11	CERAMIC CHIP	0.1MF	10%	50V
C6258	1-163-127-00	CERAMIC CHIP	270PF	5%	50V
C6259	1-110-501-11	CERAMIC CHIP	0.33MF	10%	16V
C6260	1-104-664-11	ELECT	47MF	20%	16V
C6261	1-115-339-11	CERAMIC CHIP	0.1MF	10%	50V
C6262	1-136-165-00	FILM	0.1MF	5%	50V
C6263	1-163-109-00	CERAMIC CHIP	47PF	5%	50V
C6264	1-126-964-11	ELECT	10MF	20%	50V
C6306	1-126-964-11	ELECT	10MF	20%	50V
C6307	1-163-021-91	CERAMIC CHIP	0.01MF	10%	50V
C6350	1-164-004-11	CERAMIC CHIP	0.1MF	10%	25V
C6351	1-126-967-11	ELECT	47MF	20%	50V
C6353	1-115-339-11	CERAMIC CHIP	0.1MF	10%	50V
C6354	1-136-159-00	FILM	0.033MF	5%	50V
C6355	1-163-251-11	CERAMIC CHIP	100PF	5%	50V
C6356	1-163-809-11	CERAMIC CHIP	0.047MF	10%	25V
C6357	1-136-165-00	FILM	0.1MF	5%	50V
C6358	1-104-329-11	CERAMIC CHIP	0.1MF	10%	50V
C6359	1-104-329-11	CERAMIC CHIP	0.1MF	10%	50V
C6360	1-107-714-11	ELECT	10MF	20%	50V
C6361	1-164-004-11	CERAMIC CHIP	0.1MF	10%	25V
C6362	1-164-182-11	CERAMIC CHIP	0.0033MF	10%	50V
C6363	1-104-665-11	ELECT	100MF	20%	25V
C6364	1-137-493-11	FILM	0.0047MF	5%	630V
C6365	1-163-809-11	CERAMIC CHIP	0.047MF	10%	25V
C6367	1-104-329-11	CERAMIC CHIP	0.1MF	10%	50V
C6368	1-163-021-91	CERAMIC CHIP	0.01MF	10%	50V
C6370	1-137-493-11	FILM	0.0047MF	5%	630V
C6371	1-137-493-11	FILM	0.0047MF	5%	630V
C6373	1-136-153-00	FILM	0.01MF	5%	50V
C6374	1-137-499-11	FILM	0.015MF	5%	630V
C6375	1-102-110-00	CERAMIC	220PF	10%	50V
C6376	1-104-664-11	ELECT	47MF	20%	16V
C6377	1-128-551-11	ELECT	22MF	20%	25V
C6378	1-115-339-11	CERAMIC CHIP	0.1MF	10%	50V
C6380	1-136-165-00	FILM	0.1MF	5%	50V
C6381	1-126-960-11	ELECT	1MF	20%	50V
C6385	1-104-664-11	ELECT	47MF	20%	25V
C6386	1-104-664-11	ELECT	47MF	20%	25V
C6388	1-126-964-11	ELECT	10MF	20%	50V
C6389	1-126-964-11	ELECT	10MF	20%	50V
C6392	1-104-664-11	ELECT	47MF	20%	25V
C6401	1-126-964-11	ELECT	10MF	20%	50V
C6402	1-107-714-11	ELECT	10MF	20%	50V
C6407	1-136-161-00	FILM	0.047MF	5%	50V
C6408	1-136-161-00	FILM	0.047MF	5%	50V
C6409	1-126-964-11	ELECT	10MF	20%	50V

The components identified by shading and marked ⚠ are critical for safety
Replace only with the part number specified.

D1

REF. NO.	PART.NO	DESCRIPTION	REMARK
		< CONNECTOR >	
CN6502	*1-564-509-11	PLUG, CONNECTOR 6P	
CN6601	1-695-302-11	CONNECTOR, BOARD TO BOARD 50P	
CN6622	1-568-878-51	PIN, CONNECTOR 3P	
CN6633	*1-568-878-51	PIN, CONNECTOR 3P	
		< DIODE >	
D6100	8-719-914-43	DIODE DAN202K-T-146	
D6101	8-719-923-30	DIODE MTZJ-77-4.7B	
D6102	8-719-914-43	DIODE DAN202K-T-146	
D6104	8-719-914-43	DIODE DAN202K-T-146	
D6105	8-719-914-43	DIODE DAN202K-T-146	
D6106	8-719-914-43	DIODE DAN202K-T-146	
D6108	8-719-921-40	DIODE MTZJ-T-77-4.7B	
D6127	8-719-914-43	DIODE DAN202K-T-146	
D6128	8-719-914-43	DIODE DAN202K-T-146	
D6129	8-719-914-43	DIODE DAN202K-T-146	
D6198	8-719-109-54	DIODE RD2.2ESB2	
D6253	8-719-911-19	DIODE 1SS119-25	
D6254	1-535-303-00	LEAD, JUMPER (5.0MM)	
D6350	8-719-914-47	DIODE DAN202K	
D6351	8-719-914-43	DIODE DAN202K-T-146	
D6352	8-719-914-43	DIODE DAN202K-T-146	
D6353	8-719-987-87	DIODE ERA82-004-TP1	
D6354	8-719-914-43	DIODE DAN202K-T-146	
D6355	8-719-914-43	DIODE DAN202K-T-146	
D6358	8-719-914-43	DIODE DAN202K-T-146	
D6359	8-719-302-43	DIODE RGP10GPKG23	
D6401	8-719-914-43	DIODE DAN202K-T-146	
D6402	8-719-982-03	DIODE MTZJ-T-77-3.6A	
D6403	8-719-921-63	DIODE MTZJ-T-77-7.5B	
D6404	8-719-914-43	DIODE DAN202K-T-146	
D6405	8-719-921-63	DIODE MTZJ-T-77-7.5B	
		< IC >	
IC6100	8-759-103-93	IC LM393N	
IC6101	8-759-450-95	IC LM393N	
IC6102	8-759-701-50	IC NJM3404AD	
IC6103	8-759-450-95	IC LM393N	
IC6250	8-759-478-66	IC CXA8070P	
IC6251	8-759-903-16	IC LM318P	
IC6302	8-752-072-94	IC CXA1875AM-T4	
IC6350	8-759-135-80	IC LM358P	
IC6351	8-759-103-93	IC LM393P	
IC6352	8-759-103-93	IC LM393P	
IC6353	8-759-231-53	IC L7805CV	
IC6354	8-759-325-48	IC CA0005AD	
IC6355	8-759-008-70	IC LM358N	
IC6356	8-759-822-38	IC LA6510	
		< FILTER >	
LF6350	1-406-989-21	INDUCTOR 0UH	
LF6351	1-406-989-21	INDUCTOR 0UH	
		< IC LINK >	
PS6376	⚠ 1-532-637-00	LINK, IC 1A (ICP-N25)	
		< TRANSISTOR >	
Q6100	8-729-620-06	TRANSISTOR 2SC2412K-T-146-R	
Q6101	8-729-620-06	TRANSISTOR 2SC2412K-T-146-R	
Q6102	8-729-620-06	TRANSISTOR 2SC2412K-T-146-R	
Q6103	8-729-620-06	TRANSISTOR 2SC2412K-T-146-R	
Q6104	8-729-620-06	TRANSISTOR 2SC2412K-T-146-R	
Q6105	8-729-620-06	TRANSISTOR 2SC2412K-T-146-R	
Q6106	8-729-620-06	TRANSISTOR 2SC2412K-T-146-R	
Q6107	8-729-620-06	TRANSISTOR 2SC2412K-T-146-R	
Q6108	8-729-216-22	TRANSISTOR 2SA1037K-T-146-R	
Q6110	8-729-216-22	TRANSISTOR 2SA1037K-T-146-R	
Q6112	8-729-620-06	TRANSISTOR 2SC2412K-T-146-R	
Q6113	8-729-620-06	TRANSISTOR 2SC2412K-T-146-R	
Q6118	8-729-620-06	TRANSISTOR 2SC2412K-T-146-R	
Q6119	8-729-216-22	TRANSISTOR 2SA1037K-T-146-R	
Q6120	8-729-216-22	TRANSISTOR 2SA1037K-T-146-R	
Q6122	8-729-216-22	TRANSISTOR 2SA1037K-T-146-R	
Q6123	8-729-216-22	TRANSISTOR 2SA1037K-T-146-R	
Q6125	8-729-620-06	TRANSISTOR 2SC2412K-T-146-R	
Q6126	8-729-216-22	TRANSISTOR 2SA1037K-T-146-R	
Q6127	8-729-216-22	TRANSISTOR 2SA1037K-T-146-R	
Q6128	8-729-620-06	TRANSISTOR 2SC2412K-T-146-R	
Q6129	8-729-216-22	TRANSISTOR 2SA1037K-T-146-R	
Q6130	8-729-216-22	TRANSISTOR 2SA1037K-T-146-R	
Q6131	8-729-620-06	TRANSISTOR 2SC2412K-T-146-R	
Q6201	8-729-620-06	TRANSISTOR 2SC2412K-T-146-R	
Q6202	8-729-620-06	TRANSISTOR 2SC2412K-T-146-R	
Q6250	8-729-620-06	TRANSISTOR 2SC2412K-T-146-R	
Q6251	8-729-620-06	TRANSISTOR 2SC2412K-T-146-R	
Q6252	8-729-216-22	TRANSISTOR 2SA1037K-T-146-R	
Q6253	8-729-017-06	TRANSISTOR 2SC4793	
Q6254	8-729-017-05	TRANSISTOR 2SA1837	
Q6350	8-729-620-06	TRANSISTOR 2SC2412K-T-146-R	
Q6351	8-729-119-78	TRANSISTOR 2SC1740S-RT	
Q6352	8-729-114-91	TRANSISTOR 2SB734-T-3	
Q6353	8-729-114-91	TRANSISTOR 2SB734-T-3	
Q6354	8-729-620-06	TRANSISTOR 2SC2412K-T-146-R	
Q6356	8-729-620-06	TRANSISTOR 2SC2412K-T-146-R	
Q6358	8-729-038-83	TRANSISTOR 2SK2251-01-F19	
Q6401	1-801-806-11	TRANSISTOR DTC144EKA-T146	
Q6402	1-801-806-11	TRANSISTOR DTC144EKA-T146	
Q6403	8-729-620-06	TRANSISTOR 2SC2412K-T-146-R	
Q6404	8-729-216-22	TRANSISTOR 2SA1037K-T-146-R	

D1

REF. NO.	PART.NO	DESCRIPTION	REMARK
Q6405	8-729-216-22	TRANSISTOR 2SA1037K-T-146-R	
Q6455	8-729-620-06	TRANSISTOR 2SC2412K-T-146-R	
Q6465	8-729-620-06	TRANSISTOR 2SC2412K-T-146-R	
		< RESISTOR >	
R6100	1-216-033-00	RES,CHIP 220 5% 1/10W	
R6101	1-216-033-00	RES,CHIP 220 5% 1/10W	
R6102	1-216-057-00	RES,CHIP 2.2K 5% 1/10W	
R6103	1-216-057-00	RES,CHIP 2.2K 5% 1/10W	
R6104	1-216-057-00	RES,CHIP 2.2K 5% 1/10W	
R6105	1-216-049-91	RES,CHIP 1K 5% 1/10W	
R6106	1-216-683-91	METAL CHIP 22K 5% 1/10W	
R6107	1-216-657-11	METAL CHIP 1.8K 0.50% 1/10W	
R6108	1-216-657-11	METAL CHIP 1.8K 0.50% 1/10W	
R6109	1-216-683-91	METAL CHIP 22K 5% 1/10W	
R6110	1-216-683-91	METAL CHIP 22K 5% 1/10W	
R6111	1-216-057-00	RES,CHIP 2.2K 5% 1/10W	
R6112	1-216-057-00	RES,CHIP 2.2K 5% 1/10W	
R6113	1-216-073-00	RES,CHIP 10K 5% 1/10W	
R6114	1-216-073-00	RES,CHIP 10K 5% 1/10W	
R6115	1-216-089-91	RES,CHIP 47K 5% 1/10W	
R6116	1-216-089-91	RES,CHIP 47K 5% 1/10W	
R6117	1-216-073-00	RES,CHIP 10K 5% 1/10W	
R6118	1-216-073-00	RES,CHIP 10K 5% 1/10W	
R6119	1-216-073-00	RES,CHIP 10K 5% 1/10W	
R6120	1-216-057-00	RES,CHIP 2.2K 5% 1/10W	
R6121	1-216-057-00	RES,CHIP 2.2K 5% 1/10W	
R6122	1-216-057-00	RES,CHIP 2.2K 5% 1/10W	
R6123	1-216-089-91	RES,CHIP 47K 5% 1/10W	
R6124	1-216-089-91	RES,CHIP 47K 5% 1/10W	
R6125	1-216-057-00	RES,CHIP 2.2K 5% 1/10W	
R6126	1-216-037-00	RES,CHIP 330 5% 1/10W	
R6127	1-216-659-11	METAL CHIP 2.2K 0.50% 1/10W	
R6128	1-216-691-11	METAL CHIP 47K 0.50% 1/10W	
R6131	1-216-037-00	RES,CHIP 330 5% 1/10W	
R6132	1-216-037-00	RES,CHIP 330 5% 1/10W	
R6133	1-216-037-00	RES,CHIP 330 5% 1/10W	
R6134	1-216-057-00	RES,CHIP 2.2K 5% 1/10W	
R6135	1-216-057-00	RES,CHIP 2.2K 5% 1/10W	
R6136	1-216-691-11	METAL CHIP 47K 0.50% 1/10W	
R6137	1-216-691-11	METAL CHIP 47K 0.50% 1/10W	
R6138	1-216-691-11	METAL CHIP 47K 0.50% 1/10W	
R6139	1-216-691-11	METAL CHIP 47K 0.50% 1/10W	
R6140	1-216-057-00	RES,CHIP 2.2K 5% 1/10W	
R6141	1-216-683-91	METAL CHIP 22K 5% 1/10W	
R6142	1-216-672-91	METAL CHIP 7.5K 5% 1/10W	
R6143	1-216-057-00	RES,CHIP 2.2K 5% 1/10W	
R6145	1-216-647-91	RES,CHIP 680 5% 1/10W	
R6146	1-216-667-91	METAL CHIP 4.7K 5% 1/10W	
R6147	1-216-057-00	RES,CHIP 2.2K 5% 1/10W	
R6148	1-216-057-00	RES,CHIP 2.2K 5% 1/10W	
R6149	1-216-025-91	RES,CHIP 100 5% 1/10W	
R6154	1-216-651-91	METAL CHIP 1K 5% 1/10W	
R6155	1-216-667-91	RES,CHIP 4.7K 0.50% 1/10W	
R6158	1-216-671-91	RES,CHIP 6.8K 5% 1/10W	
R6159	1-216-295-91	SHORT 0	
R6160	1-216-295-91	SHORT 0	
R6161	1-216-671-11	METAL CHIP 6.8K 0.50% 1/10W	
R6162	1-216-049-91	RES,CHIP 1K 5% 1/10W	
R6165	1-216-699-11	METAL CHIP 100K 0.50% 1/10W	
R6168	1-216-065-91	RES,CHIP 4.7K 5% 1/10W	
R6169	1-216-699-11	METAL CHIP 100K 0.50% 1/10W	
R6170	1-216-037-00	RES,CHIP 330 5% 1/10W	
R6171	1-216-057-00	RES,CHIP 2.2K 5% 1/10W	
R6174	1-216-075-00	RES,CHIP 12K 5% 1/10W	
R6175	1-216-075-00	RES,CHIP 12K 5% 1/10W	
R6176	1-216-043-91	RES,CHIP 2.2K 5% 1/10W	
R6177	1-216-065-91	RES,CHIP 4.7K 5% 1/10W	
R6178	1-216-073-00	RES,CHIP 10K 5% 1/10W	
R6179	1-216-635-91	RES,CHIP 220K 5% 1/10W	
R6180	1-216-057-00	RES,CHIP 2.2K 5% 1/10W	
R6182	1-216-089-91	RES,CHIP 47K 5% 1/10W	
R6183	1-216-057-00	RES,CHIP 2.2K 5% 1/10W	
R6186	1-216-657-91	RES,CHIP 1.8K 5% 1/10W	
R6187	1-216-065-91	RES,CHIP 4.7K 5% 1/10W	
R6189	1-216-631-91	RES,CHIP 150K 5% 1/10W	
R6190	1-216-057-00	RES,CHIP 2.2K 5% 1/10W	
R6191	1-215-925-11	METAL OXIDE 22K 5% 3W F	
R6192	1-216-665-91	METAL CHIP 3.9K 5% 1/10W	
R6194	1-216-065-91	RES,CHIP 4.7K 5% 1/10W	
R6195	1-216-683-91	METAL CHIP 22K 5% 1/10W	
R6196	1-249-377-11	CARBON 0.47 5% 1/4W F	
R6198	1-216-081-91	RES,CHIP 22K 5% 1/10W	
R6199	1-216-081-91	RES,CHIP 22K 5% 1/10W	
R6205	1-216-025-91	RES,CHIP 100 5% 1/10W	
R6206	1-216-105-91	RES,CHIP 220K 5% 1/10W	
R6207	1-218-760-91	RES,CHIP 220K 5% 1/10W	
R6208	1-216-089-91	RES,CHIP 47K 5% 1/10W	
R6209	1-216-295-91	SHORT 0	
R6210	1-216-057-00	RES,CHIP 2.2K 5% 1/10W	
R6211	1-216-073-00	RES,CHIP 10K 5% 1/10W	
R6212	1-216-057-00	RES,CHIP 2.2K 5% 1/10W	
R6216	1-216-089-91	RES,CHIP 47K 5% 1/10W	
R6217	1-216-073-00	RES,CHIP 10K 5% 1/10W	
R6254	1-216-049-91	RES,CHIP 1K 5% 1/10W	
R6255	1-216-061-00	RES,CHIP 3.3K 5% 1/10W	
R6256	1-216-057-00	RES,CHIP 2.2K 5% 1/10W	
R6257	1-216-061-00	RES,CHIP 3.3K 5% 1/10W	
R6258	1-216-057-00	RES,CHIP 2.2K 5% 1/10W	
R6259	1-216-097-91	RES,CHIP 100K 5% 1/10W	
R6260	1-216-049-91	RES,CHIP 1K 5% 1/10W	
R6261	1-216-097-91	RES,CHIP 100K 5% 1/10W	

REF. NO.	PART.NO	DESCRIPTION			REMARK
R6262	1-260-321-71	CARBON	270	5%	1/2W
R6263	1-216-025-91	RES,CHIP	100	5%	1/10W
R6264	1-216-025-91	RES,CHIP	100	5%	1/10W
R6265	1-216-101-00	RES,CHIP	150K	5%	1/10W
R6267	1-216-049-91	RES,CHIP	1K	5%	1/10W
R6269	1-216-667-11	METAL CHIP	4.7K	0.50%	1/10W
R6270	1-216-667-11	METAL CHIP	4.7K	0.50%	1/10W
R6271	1-216-683-11	METAL CHIP	22K	0.50%	1/10W
R6272	1-216-081-71	RES,CHIP	22K	5%	1/10W
R6273	1-216-081-00	RES,CHIP	22K	5%	1/10W
R6276	1-216-689-11	METAL CHIP	39K	0.50%	1/10W
R6277	1-216-686-11	METAL CHIP	30K	0.50%	1/10W
R6278	1-216-057-00	RES,CHIP	2.2K	5%	1/10W
R6279	1-216-057-00	RES,CHIP	2.2K	5%	1/10W
R6280	1-249-377-11	CARBON	0.47	5%	1/4W F
R6281	1-249-377-11	CARBON	0.47	5%	1/4W F
R6282	1-215-886-11	METAL OXIDE	100	5%	2W F
R6283	1-216-393-00	METAL OXIDE	2.2	5%	3W F
R6284	1-216-113-00	RES,CHIP	470K	5%	1/10W
R6285	1-216-057-00	RES,CHIP	2.2K	5%	1/10W
R6286	1-216-073-00	RES,CHIP	10K	5%	1/10W
R6287	1-216-073-00	RES,CHIP	10K	5%	1/10W
R6313	1-216-295-91	SHORT	0		
R6322	1-216-049-91	RES,CHIP	1K	5%	1/10W
R6323	1-216-049-91	RES,CHIP	1K	5%	1/10W
R6324	1-216-025-91	RES,CHIP	100	5%	1/10W
R6325	1-216-025-91	RES,CHIP	100	5%	1/10W
R6350	1-216-089-91	RES,CHIP	47K	5%	1/10W
R6351	1-218-762-11	METAL CHIP	270K	0.50%	1/10W
R6353	1-216-668-11	METAL CHIP	5.1K	0.50%	1/10W
R6355	1-218-774-11	METAL CHIP	820K	0.50%	1/10W
R6356	1-216-675-11	METAL CHIP	10K	0.50%	1/10W
R6357	1-216-057-00	RES,CHIP	2.2K	5%	1/10W
R6358	1-216-047-91	RES,CHIP	820	5%	1/10W
R6359	1-216-097-91	RES,CHIP	100K	5%	1/10W
R6360	1-216-073-00	RES,CHIP	10K	5%	1/10W
R6361	1-216-097-91	RES,CHIP	100K	5%	1/10W
R6362	1-216-687-11	METAL CHIP	33K	0.50%	1/10W
R6363	1-216-675-11	METAL CHIP	10K	0.50%	1/10W
R6364	1-216-057-00	RES,CHIP	2.2K	5%	1/10W
R6365	1-216-033-00	RES,CHIP	220	5%	1/10W
R6366	1-216-057-00	RES,CHIP	2.2K	5%	1/10W
R6367	1-216-679-11	METAL CHIP	15K	0.50%	1/10W
R6368	1-218-756-11	METAL CHIP	150K	0.50%	1/10W
R6369	1-218-762-11	METAL CHIP	270K	0.50%	1/10W
R6370	1-216-676-11	METAL CHIP	11K	0.50%	1/10W
R6371	1-215-910-00	METAL OXIDE	68	5%	3W F
R6372	1-216-033-00	RES,CHIP	220	5%	1/10W
R6373	1-216-681-11	METAL CHIP	18K	0.50%	1/10W
R6374	1-216-689-11	METAL CHIP	39K	0.50%	1/10W
R6375	1-216-041-00	RES,CHIP	470	5%	1/10W
R6377	1-216-689-11	METAL CHIP	39K	0.50%	1/10W
R6378	1-216-675-11	METAL CHIP	10K	0.50%	1/10W
R6379	1-216-295-91	SHORT	0		
R6380	1-218-754-11	METAL CHIP	120K	0.50%	1/10W
R6381	1-216-045-00	RES,CHIP	680	5%	1/10W
R6382	1-218-754-11	METAL CHIP	120K	0.50%	1/10W
R6383	1-216-687-11	METAL CHIP	33K	0.50%	1/10W
R6384	1-216-043-91	RES,CHIP	560	5%	1/10W
R6385	1-216-295-91	SHORT	0		
R6386	1-216-699-11	METAL CHIP	100K	0.50%	1/10W
R6387	1-216-677-11	METAL CHIP	12K	0.50%	1/10W
R6391	1-249-417-11	CARBON	1K	5%	1/4W
R6394	1-216-069-00	RES,CHIP	6.8K	5%	1/10W
R6395	1-216-081-00	RES,CHIP	22K	5%	1/10W
R6397	1-216-675-11	METAL CHIP	10K	0.50%	1/10W
R6398	1-216-065-91	RES,CHIP	4.7K	5%	1/10W
R6399	1-216-699-11	METAL CHIP	100K	0.50%	1/10W
R6400	1-216-675-11	METAL CHIP	10K	0.50%	1/10W
R6401	1-216-295-91	SHORT	0		
R6402	1-216-295-91	SHORT	0		
R6403	1-216-661-11	METAL CHIP	2.7K	0.50%	1/10W
R6404	1-216-683-11	METAL CHIP	22K	0.50%	1/10W
R6405	1-216-683-11	METAL CHIP	22K	0.50%	1/10W
R6409	1-216-025-91	RES,CHIP	100	5%	1/10W
R6410	1-216-073-91	RES,CHIP	10K	5%	1/10W
R6411	1-216-073-00	RES,CHIP	10K	5%	1/10W
R6412	1-216-073-00	RES,CHIP	10K	5%	1/10W
R6413	1-216-679-11	METAL CHIP	15K	0.50%	1/10W
R6414	1-216-679-11	METAL CHIP	15K	0.50%	1/10W
R6415	1-216-683-11	METAL CHIP	22K	0.50%	1/10W
R6416	1-216-683-11	METAL CHIP	22K	0.50%	1/10W
R6418	1-216-093-00	RES,CHIP	68K	5%	1/10W
R6419	1-216-073-00	RES,CHIP	10K	5%	1/10W
R6420	1-216-091-00	RES,CHIP	56K	5%	1/10W
R6421	1-216-637-11	METAL CHIP	270	0.50%	1/10W
R6422	1-216-639-11	METAL CHIP	330	0.50%	1/10W
R6423	1-216-657-11	METAL CHIP	1.8K	0.50%	1/10W
R6426	1-216-081-00	RES,CHIP	22K	5%	1/10W
R6427	1-216-081-00	RES,CHIP	22K	5%	1/10W
R6428	1-216-107-00	RES,CHIP	270K	5%	1/10W
R6429	1-216-065-91	RES,CHIP	4.7K	5%	1/10W
R6430	1-216-065-91	RES,CHIP	4.7K	5%	1/10W
R6432	1-216-057-00	RES,CHIP	2.2K	5%	1/10W
R6433	1-216-073-00	RES,CHIP	10K	5%	1/10W
R6437	1-249-422-11	CARBON	2.7K	5%	1/4W
R6438	1-249-421-11	CARBON	2.2K	5%	1/4W
R6439	1-216-683-11	METAL CHIP	22K	0.50%	1/10W
R6440	1-216-683-11	METAL CHIP	22K	0.50%	1/10W
R6441	1-216-673-11	METAL CHIP	8.2K	0.50%	1/10W
R6442	1-216-039-00	RES,CHIP	390	5%	1/10W
R6455	1-216-295-91	SHORT	0		

REF. NO.	PART.NO	DESCRIPTION				REMARK
R6456	1-216-097-91	RES,CHIP	100K	5%	1/10W	
R6457	1-216-075-00	RES,CHIP	12K	5%	1/10W	
R6458	1-216-089-91	RES,CHIP	47K	5%	1/10W	
R6459	1-216-057-00	RES,CHIP	2.2K	5%	1/10W	
R6460	1-249-393-11	CARBON	10	5%	1/4W	
R6461	1-249-411-11	CARBON	330	5%	1/4W	
R6462	1-249-406-11	CARBON	120	5%	1/4W	
R6463	1-216-095-00	RES,CHIP	82K	5%	1/10W	
R6464	1-216-079-00	RES,CHIP	18K	5%	1/10W	

****

A-1644-094-A VM BOARD, COMPLETE
****

4-382-854-11 SCREW (M3X10), P, SW (+)

< CAPACITOR >

C5400	1-107-883-11	ELECT	330MF	20%	16V	
C5401	1-126-935-11	ELECT	470MF	20%	16V	
C5402	1-137-370-11	FILM	0.01MF	5%	50V	
C5403	1-126-935-11	ELECT	470MF	20%	6.3V	
C5405	1-126-933-11	ELECT	100MF	20%	16V	
C5406	1-126-935-11	ELECT	470MF	20%	6.3V	
C5407	1-104-989-91	FILM	0.0022MF	5%	200V	
C5408	1-104-989-91	FILM	0.0022MF	5%	200V	
C5409	1-107-649-11	ELECT	2.2MF	20%	250V	
C5410	1-137-364-11	FILM	0.001MF	5%	50V	
C5411	1-137-364-11	FILM	0.001MF	5%	50V	
C5412	1-126-933-11	ELECT	100MF	20%	16V	
C5413	1-126-933-11	ELECT	100MF	20%	16V	
C5414	1-107-638-11	ELECT	33MF	20%	160V	
C5415	1-107-363-91	FILM	0.0068MF	10%	200V	
C5416	1-102-106-00	CERAMIC	100PF	10%	50V	
C5419	1-101-880-00	CERAMIC	47PF	5%	50V	
C5430	1-162-117-00	CERAMIC	100PF	10%	500V	

< CONNECTOR >

CN5402	*1-568-878-51	PIN, CONNECTOR 3P	
CN5444	*1-770-723-11	CONNECTOR, BOARD TO BOARD 8P	
CN5555	1-695-915-11	TAB (CONTACT)	
CN5602	*1-564-509-11	PLUG, CONNECTOR 6P	

< DIODE >

D5400	8-719-991-33	DIODE 1SS133T-77	
D5401	8-719-510-02	DIODE D1NS4-TR	
D5402	8-719-991-33	DIODE 1SS133T-77	
D5403	8-719-991-33	DIODE 1SS133T-77	
D5404	8-719-991-33	DIODE 1SS133T-77	
D5405	8-719-924-11	DIODE MTZJ-T-77-22	
D5406	8-719-924-11	DIODE MTZJ-T-77-22	

< FERRITE BEAD >

FB5400	1-410-397-21	FERRITE	1.1UH
FB5401	1-410-396-41	FERRITE	0.45UH

< COIL >

L5400	1-410-784-41	INDUCTOR	0.18UH

< TRANSISTOR >

Q5400	8-729-119-78	TRANSISTOR 2SC1740S-RT
Q5401	8-729-119-78	TRANSISTOR 2SC1740S-RT
Q5402	8-729-119-78	TRANSISTOR 2SC1740S-RT
Q5403	8-729-119-78	TRANSISTOR 2SC1740S-RT
Q5404	8-729-026-41	TRANSISTOR 2SA933AS-RT
Q5405	8-729-026-41	TRANSISTOR 2SA933AS-RT
Q5406	8-729-017-05	TRANSISTOR 2SA1837
Q5407	8-729-017-06	TRANSISTOR 2SC4793

< RESISTOR >

R5400	1-249-401-11	CARBON	47	5%	1/4W	
R5401	1-249-421-11	CARBON	2.2K	5%	1/4W	
R5402	1-249-413-11	CARBON	470	5%	1/4W	
R5403	1-249-393-11	CARBON	10	5%	1/4W	F
R5404	1-249-417-11	CARBON	1K	5%	1/4W	
R5405	1-249-425-11	CARBON	4.7K	5%	1/4W	
R5406	1-249-425-11	CARBON	4.7K	5%	1/4W	
R5407	1-249-399-11	CARBON	33	5%	1/4W	
R5408	1-247-807-31	CARBON	100	5%	1/4W	
R5409	1-247-815-91	CARBON	220	5%	1/4W	
R5410	1-249-401-11	CARBON	47	5%	1/4W	
R5411	1-249-401-11	CARBON	47	5%	1/4W	
R5412	1-249-429-11	CARBON	10K	5%	1/4W	
R5413	1-249-414-11	CARBON	560	5%	1/4W	F
R5414	1-249-432-11	CARBON	18K	5%	1/4W	
R5415	1-260-311-11	CARBON	39	5%	1/2W	
R5416	1-249-383-11	CARBON	1.5	5%	1/4W	F
R5417	1-249-432-11	CARBON	18K	5%	1/4W	
R5418	1-249-414-11	CARBON	560	5%	1/4W	
R5419	1-249-421-11	CARBON	2.2K	5%	1/4W	
R5420	1-249-421-11	CARBON	2.2K	5%	1/4W	
R5421	1-249-383-11	CARBON	1.5	5%	1/4W	F
R5422	1-249-400-11	CARBON	39	5%	1/4W	F
R5423	1-215-914-11	METAL OXIDE	330	5%	3W	F
R5425	1-249-419-11	CARBON	1.5K	5%	1/4W	

****

A-1646-170-A H1 BOARD, COMPLETE
****

< CAPACITOR >

C7900	1-101-810-00	CERAMIC	100PF	5%	500V

REF. NO.	PART.NO	DESCRIPTION	REMARK
C7901	1-101-810-00	CERAMIC 100PF 5%	500V
C7925	1-137-372-11	FILM 0.022MF 5%	50V
C7926	1-137-372-11	FILM 0.022MF 5%	50V
		< CONNECTOR >	
CN7103	*1-564-514-11	PLUG, CONNECTOR 11P	
		< SOCKET >	
J7900	1-779-947-11	TERMINAL BLOCK, S	
J7925	1-764-606-11	JACK	
		< COIL >	
L7925	1-414-183-41	INDUCTOR 10UH	
L7926	1-414-183-41	INDUCTOR 10UH	
		< RESISTOR >	
R7900	1-535-303-00	LEAD, JUMPER (5.0MM)	
R7901	1-249-417-11	CARBON 1K 5%	1/4W
R7902	1-247-895-91	CARBON 470K 5%	1/4W
R7903	1-247-895-91	CARBON 470K 5%	1/4W
R7904	1-535-303-00	LEAD, JUMPER (5.0MM)	
R7905	1-249-417-11	CARBON 1K 5%	1/4W
R7906	1-535-303-00	LEAD, JUMPER (5.0MM)	
**********			
	A-1648-015-A	U BOARD, COMPLETE	
		**********	
		< CONNECTOR >	
CN7101	1-573-299-21	CONNECTOR, BOARD TO BOARD 10P	
CN7977	*1-564-519-11	PLUG, CONNECTOR 4P	
CN7988	*1-564-519-11	PLUG, CONNECTOR 4P	
CN7990	*1-564-518-11	PLUG, CONNECTOR 3P	
		< JACK >	
J7952	1-537-339-11	TERMINAL BOARD	
		< COIL >	
L7954	1-402-711-11	INDUCTOR 1UH	
L7956	1-402-711-11	INDUCTOR 1UH	
**********			
	A-1651-098-A	J BOARD, COMPLETE (KV-29FX60A/29FX60D/	
		********** 29FX60E/29FX60U)	
	A-1651-103-A	J BOARD, COMPLETE (KV-29FX60B)	
		**********	
		< CAPACITOR >	
C8100	1-107-823-11	CERAMIC CHIP 0.47MF 10%	16V
C8101	1-107-823-11	CERAMIC CHIP 0.47MF 10%	16V
C8102	1-104-760-11	CERAMIC CHIP 0.047MF 10%	50V
C8103	1-104-664-11	ELECT 47MF 20%	16V
C8104	1-126-934-11	ELECT 220MF 20%	16V
C8105	1-126-933-11	ELECT 100MF 20%	16V
C8106	1-126-933-11	ELECT 100MF 20%	16V
C8107	1-126-933-11	ELECT 100MF 20%	16V
C8108	1-126-933-11	ELECT 100MF 20%	16V
C8109	1-164-004-11	CERAMIC CHIP 0.1MF 10%	25V
C8110	1-164-004-11	CERAMIC CHIP 0.1MF 10%	25V
C8111	1-126-933-11	ELECT 100MF 20%	16V
C8125	1-107-823-11	CERAMIC CHIP 0.47MF 10%	16V
C8126	1-107-823-11	CERAMIC CHIP 0.47MF 10%	16V
C8127	1-164-004-11	CERAMIC CHIP 0.1MF 10%	25V
C8128	1-104-664-11	ELECT 47MF 20%	16V
C8129	1-107-823-11	CERAMIC CHIP 0.47MF 10%	16V
C8130	1-107-823-11	CERAMIC CHIP 0.47MF 10%	16V
C8131	1-107-823-11	CERAMIC CHIP 0.47MF 10%	16V
C8132	1-107-823-11	CERAMIC CHIP 0.47MF 10%	16V
C8133	1-104-664-11	ELECT 47MF 20%	16V
C8134	1-104-664-11	ELECT 47MF 20%	16V
C8135	1-164-505-11	CERAMIC CHIP 2.2MF	16V
C8136	1-163-251-11	CERAMIC CHIP 100PF 5%	50V
C8137	1-164-505-11	CERAMIC CHIP 2.2MF	16V
C8138	1-107-823-11	CERAMIC CHIP 0.47MF 10%	16V
C8139	1-107-823-11	CERAMIC CHIP 0.47MF 10%	16V
C8140	1-107-823-11	CERAMIC CHIP 0.47MF 10%	16V
C8141	1-107-823-11	CERAMIC CHIP 0.47MF 10%	16V
C8142	1-107-823-11	CERAMIC CHIP 0.47MF 10%	16V
C8143	1-107-823-11	CERAMIC CHIP 0.47MF 10%	16V
C8144	1-107-823-11	CERAMIC CHIP 0.47MF 10%	16V
C8145	1-107-823-11	CERAMIC CHIP 0.47MF 10%	16V
C8146	1-163-251-11	CERAMIC CHIP 100PF 5%	50V
C8200	1-104-664-11	ELECT 47MF 20%	16V
C8201	1-163-241-11	CERAMIC CHIP 39PF 5%	50V
C8202	1-164-004-11	CERAMIC CHIP 0.1MF 10%	25V
C8203	1-164-004-11	CERAMIC CHIP 0.1MF 10%	25V
C8204	1-164-506-11	CERAMIC CHIP 4.7MF	16V
C8205	1-165-319-11	CERAMIC CHIP 0.1MF	50V
C8208	1-164-506-11	CERAMIC CHIP 4.7MF	16V
C8209	1-163-251-11	CERAMIC CHIP 100PF 5%	50V
C8210	1-164-004-11	CERAMIC CHIP 0.1MF 10%	25V
C8211	1-163-243-11	CERAMIC CHIP 47PF 5%	50V
C8212	1-163-243-11	CERAMIC CHIP 47PF 5%	50V
C8213	1-163-087-00	CERAMIC CHIP 4PF	0.25PF 50V
C8214	1-163-087-00	CERAMIC CHIP 4PF	0.25PF 50V
C8215	1-163-243-11	CERAMIC CHIP 47PF 5%	50V
C8216	1-126-933-11	ELECT 100MF 20%	16V
C8217	1-164-004-11	CERAMIC CHIP 0.1MF 10%	25V
C8218	1-126-964-11	ELECT 10MF 20%	50V
C8219	1-164-004-11	CERAMIC CHIP 0.1MF 10%	25V
C8220	1-126-964-11	ELECT 10MF 20%	50V

J

REF. NO.	PART.NO	DESCRIPTION	REMARK
C8221	1-104-664-11	ELECT 47MF	20% 16V
C8222	1-104-664-11	ELECT 47MF	20% 16V
C8223	1-104-664-11	ELECT 47MF	20% 16V
C8224	1-164-004-11	CERAMIC CHIP 0.1MF	10% 25V
C8225	1-104-664-11	ELECT 47MF	20% 16V
C8227	1-163-009-91	CERAMIC CHIP 0.001MF	10% 50V
C8228	1-163-009-11	CERAMIC CHIP 0.001MF	10% 50V
C8229	1-163-009-11	CERAMIC CHIP 0.001MF	10% 50V
C8230	1-163-009-11	CERAMIC CHIP 0.001MF	10% 50V
C8231	1-163-009-11	CERAMIC CHIP 0.001MF	10% 50V
C8232	1-164-004-11	CERAMIC CHIP 0.1MF	10% 25V
C8233	1-104-664-11	ELECT 47MF	20% 16V
C8234	1-107-823-11	CERAMIC CHIP 0.47MF	10% 16V
C8235	1-107-823-11	CERAMIC CHIP 0.47MF	10% 16V
C8236	1-126-933-11	ELECT 100MF	20% 16V
C8237	1-163-021-91	CERAMIC CHIP 0.01MF	10% 50V
C8238	1-164-505-11	CERAMIC CHIP 2.2MF	16V
C8239	1-107-823-11	CERAMIC CHIP 0.47MF	10% 16V
C8240	1-107-823-11	CERAMIC CHIP 0.47MF	10% 16V
C8241	1-126-964-11	ELECT 10MF	20% 50V
C8242	1-104-664-11	ELECT 47MF	20% 16V
C8300	1-115-340-11	CERAMIC CHIP 0.22MF	10% 25V
C8301	1-164-004-11	CERAMIC CHIP 0.1MF	10% 25V
C8302	1-164-004-11	CERAMIC CHIP 0.1MF	10% 25V
C8303	1-115-340-11	CERAMIC CHIP 0.22MF	10% 25V
C8304	1-164-004-11	CERAMIC CHIP 0.1MF	10% 25V
C8305	1-164-004-11	CERAMIC CHIP 0.1MF	10% 25V
C8306	1-164-004-11	CERAMIC CHIP 0.1MF	10% 25V
C8308	1-126-933-11	ELECT 100MF	20% 16V
C8310	1-164-004-11	CERAMIC CHIP 0.1MF	10% 25V
C8311	1-164-004-11	CERAMIC CHIP 0.1MF	10% 25V
C8312	1-164-004-11	CERAMIC CHIP 0.1MF	10% 25V
C8313	1-164-004-11	CERAMIC CHIP 0.1MF	10% 25V
C8314	1-164-004-11	CERAMIC CHIP 0.1MF	10% 25V
C8315	1-164-004-11	CERAMIC CHIP 0.1MF	10% 25V
C8316	1-164-004-11	CERAMIC CHIP 0.1MF	10% 25V
C8317	1-164-004-11	CERAMIC CHIP 0.1MF	10% 25V
C8318	1-126-933-11	ELECT 100MF	20% 16V
C8319	1-164-004-11	CERAMIC CHIP 0.1MF	10% 25V
C8320	1-164-004-11	CERAMIC CHIP 0.1MF	10% 25V
C8321	1-164-004-11	CERAMIC CHIP 0.1MF	10% 25V
C8322	1-126-933-11	ELECT 100MF	20% 16V
C8323	1-164-182-11	CERAMIC CHIP 0.0033MF	10% 50V
C8324	1-164-004-11	CERAMIC CHIP 0.1MF	10% 25V
C8325	1-115-340-11	CERAMIC CHIP 0.22MF	10% 25V
C8326	1-163-231-11	CERAMIC CHIP 15PF	5% 50V
C8327	1-115-340-11	CERAMIC CHIP 0.22MF	10% 25V
C8328	1-115-340-11	CERAMIC CHIP 0.22MF	10% 25V
C8329	1-115-340-11	CERAMIC CHIP 0.22MF	10% 25V
C8330	1-163-231-11	CERAMIC CHIP 15PF	5% 50V
C8331	1-126-960-11	ELECT 1MF	20% 50V
C8332	1-163-017-00	CERAMIC CHIP 0.0047MF	10% 50V
C8343	1-163-185-00	CERAMIC CHIP 150PF	5% 50V (KV-29FX60B)
C8344	1-163-173-00	CERAMIC CHIP 47PF	5% 50V (KV-29FX60B)
C8401	1-164-004-11	CERAMIC CHIP 0.1MF	10% 25V
C8402	1-164-004-11	CERAMIC CHIP 0.1MF	10% 25V
C8403	1-164-004-11	CERAMIC CHIP 0.1MF	10% 25V
C8404	1-164-004-11	CERAMIC CHIP 0.1MF	10% 25V
C8405	1-164-004-11	CERAMIC CHIP 0.1MF	10% 25V
C8406	1-164-004-11	CERAMIC CHIP 0.1MF	10% 25V
C8407	1-164-004-11	CERAMIC CHIP 0.1MF	10% 25V
C8408	1-164-182-11	CERAMIC CHIP 0.0033MF	10% 50V
C8409	1-164-004-11	CERAMIC CHIP 0.1MF	10% 25V
C8410	1-115-340-11	CERAMIC CHIP 0.22MF	10% 25V
C8411	1-115-340-11	CERAMIC CHIP 0.22MF	10% 25V
C8412	1-115-340-11	CERAMIC CHIP 0.22MF	10% 25V
C8413	1-115-340-11	CERAMIC CHIP 0.22MF	10% 25V
C8414	1-163-231-11	CERAMIC CHIP 15PF	5% 50V
C8415	1-163-231-11	CERAMIC CHIP 15PF	5% 50V
C8416	1-164-004-11	CERAMIC CHIP 0.1MF	10% 25V
C8417	1-163-017-00	CERAMIC CHIP 0.0047MF	10% 50V
C8418	1-164-004-11	CERAMIC CHIP 0.1MF	10% 25V
C8419	1-164-004-11	CERAMIC CHIP 0.1MF	10% 25V
C8420	1-164-004-11	CERAMIC CHIP 0.1MF	10% 25V
C8421	1-126-933-11	ELECT 100MF	20% 16V
C8422	1-126-960-11	ELECT 1MF	20% 50V
C8423	1-126-933-11	ELECT 100MF	20% 16V
C8425	1-164-004-11	CERAMIC CHIP 0.1MF	10% 25V
C8426	1-164-004-11	CERAMIC CHIP 0.1MF	10% 25V
C8427	1-164-004-11	CERAMIC CHIP 0.1MF	10% 25V
C8450	1-104-664-11	ELECT 47MF	20% 16V
C8451	1-104-664-11	ELECT 47MF	20% 16V
C8455	1-115-340-11	CERAMIC CHIP 0.22MF	10% 25V
C8456	1-115-340-11	CERAMIC CHIP 0.22MF	10% 25V
C8550	1-126-933-11	ELECT 100MF	20% 16V
C8551	1-126-933-11	ELECT 100MF	20% 16V
C8552	1-163-231-11	CERAMIC CHIP 15PF	5% 50V
C8553	1-163-231-11	CERAMIC CHIP 15PF	5% 50V
C8554	1-107-823-11	CERAMIC CHIP 0.47MF	10% 16V
C8555	1-107-823-11	CERAMIC CHIP 0.47MF	10% 16V
C8556	1-126-933-11	ELECT 100MF	20% 16V
C8557	1-164-004-11	CERAMIC CHIP 0.1MF	10% 25V
C8558	1-164-004-11	CERAMIC CHIP 0.1MF	10% 25V
C8559	1-163-021-91	CERAMIC CHIP 0.01MF	10% 50V
C8560	1-164-004-11	CERAMIC CHIP 0.1MF	10% 25V
C8561	1-164-004-11	CERAMIC CHIP 0.1MF	10% 25V
C8562	1-164-004-11	CERAMIC CHIP 0.1MF	10% 25V
C8563	1-164-004-11	CERAMIC CHIP 0.1MF	10% 25V
C8564	1-163-121-00	CERAMIC CHIP 150PF	5% 50V
C8565	1-163-227-11	CERAMIC CHIP 10PF	0.5PF 50V

REF. NO.	PART.NO	DESCRIPTION	REMARK
C8566	1-163-263-11	CERAMIC CHIP 330PF 5% 50V	
C8567	1-163-263-11	CERAMIC CHIP 330PF 5% 50V	
C8568	1-164-004-11	CERAMIC CHIP 0.1MF 10% 25V	
C8569	1-164-004-11	CERAMIC CHIP 0.1MF 10% 25V	
C8570	1-164-004-11	CERAMIC CHIP 0.1MF 10% 25V	
C8601	1-115-340-11	CERAMIC CHIP 0.22MF 10% 25V	
C8602	1-115-340-11	CERAMIC CHIP 0.22MF 10% 25V	
C8605	1-115-340-11	CERAMIC CHIP 0.22MF 10% 25V	
C8606	1-115-340-11	CERAMIC CHIP 0.22MF 10% 25V	
C8607	1-104-664-11	ELECT 47MF 20% 16V	
C8608	1-104-664-11	ELECT 47MF 20% 16V	
C8609	1-115-340-11	CERAMIC CHIP 0.22MF 10% 25V	
C8610	1-115-340-11	CERAMIC CHIP 0.22MF 10% 25V	
C8611	1-115-340-11	CERAMIC CHIP 0.22MF 10% 25V	
C8612	1-115-340-11	CERAMIC CHIP 0.22MF 10% 25V	
C8613	1-104-664-11	ELECT 47MF 20% 16V	
C8614	1-104-664-11	ELECT 47MF 20% 16V	
C8900	1-163-251-11	CERAMIC CHIP 100PF 5% 50V	
C8901	1-163-017-00	CERAMIC CHIP 0.0047MF 10% 50V	
C8902	1-163-017-00	CERAMIC CHIP 0.0047MF 10% 50V	
C8903	1-163-251-11	CERAMIC CHIP 100PF 5% 50V	
C8904	1-163-251-11	CERAMIC CHIP 100PF 5% 50V	
C8905	1-163-251-11	CERAMIC CHIP 100PF 5% 50V	
C8906	1-163-017-00	CERAMIC CHIP 0.0047MF 10% 50V	
C8907	1-163-017-00	CERAMIC CHIP 0.0047MF 10% 50V	
C8908	1-163-251-11	CERAMIC CHIP 100PF 5% 50V	
C8909	1-163-017-00	CERAMIC CHIP 0.0047MF 10% 50V	
C8910	1-163-251-11	CERAMIC CHIP 100PF 5% 50V	
C8911	1-163-017-00	CERAMIC CHIP 0.0047MF 10% 50V	
C8916	1-126-933-11	ELECT 100MF 20% 16V	
C8977	1-163-009-11	CERAMIC CHIP 0.001MF 10% 50V	
C8978	1-163-009-11	CERAMIC CHIP 0.001MF 10% 50V	
		< FILTER >	
CF8200	1-409-327-00	TRAP, CERAMIC (6.5MHZ)	
		< CONNECTOR >	
CN8101	1-695-302-11	CONNECTOR, BOARD TO BOARD 50P	
CN8102	*1-564-518-11	PLUG, CONNECTOR 3P	
CN8900	1-561-534-41	SOCKET, PIN 21P	
CN8901	1-695-293-11	SOCKET 21P	
CN8902	1-695-293-11	SOCKET 21P	
		< DIODE >	
D8125	8-719-158-49	DIODE UDZ-TE-17-12B	
D8126	8-719-158-49	DIODE UDZ-TE-17-12B	
D8127	8-719-158-49	DIODE UDZ-TE-17-12B	
D8128	8-719-158-49	DIODE UDZ-TE-17-12B	
D8129	8-719-158-49	DIODE UDZ-TE-17-12B	
D8130	8-719-158-49	DIODE UDZ-TE-17-12B	
D8131	8-719-158-49	DIODE UDZ-TE-17-12B	
D8132	8-719-158-49	DIODE UDZ-TE-17-12B	
D8200	8-719-158-49	DIODE UDZ-TE-17-12B	
D8201	8-719-158-49	DIODE UDZ-TE-17-12B	
D8202	8-719-158-49	DIODE UDZ-TE-17-12B	
D8203	8-719-158-49	DIODE UDZ-TE-17-12B	
D8349	8-719-914-42	DIODE DA204K-T-146	
D8432	8-719-914-42	DIODE DA204K-T-146	(KV-29FX60B)
D8450	8-719-158-49	DIODE UDZ-TE-17-12B	
D8451	8-719-158-49	DIODE UDZ-TE-17-12B	
D8550	8-719-914-42	DIODE DA204K-T-146	
D8900	8-719-056-85	DIODE UDZ-8.2B	
D8901	8-719-056-85	DIODE UDZ-8.2B	
D8902	8-719-056-85	DIODE UDZ-8.2B	
D8903	8-719-056-85	DIODE UDZ-8.2B	
D8904	8-719-056-85	DIODE UDZ-8.2B	
D8905	8-719-056-85	DIODE UDZ-8.2B	
D8906	8-719-056-85	DIODE UDZ-8.2B	
D8907	8-719-056-85	DIODE UDZ-8.2B	
D8908	8-719-056-85	DIODE UDZ-8.2B	
D8909	8-719-056-85	DIODE UDZ-8.2B	
D8910	8-719-056-85	DIODE UDZ-8.2B	
D8911	8-719-056-85	DIODE UDZ-8.2B	
D8912	8-719-158-49	DIODE UDZ-TE-17-12B	
D8913	8-719-158-49	DIODE UDZ-TE-17-12B	
D8914	8-719-158-49	DIODE UDZ-TE-17-12B	
D8915	8-719-158-49	DIODE UDZ-TE-17-12B	
D8922	8-719-056-84	DIODE UDZ-TE-17-7.5B	
D8923	8-719-978-04	DIODE UDZ-TE-17-3.3B	
		< FILTER >	
FL8200	1-236-071-11	ENCAPSULATED COMPONENT	
FL8201	1-233-764-21	FILTER	
FL8203	1-236-071-11	ENCAPSULATED COMPONENT	
FL8300	1-236-071-11	ENCAPSULATED COMPONENT	
FL8301	1-236-071-11	ENCAPSULATED COMPONENT	
FL8400	1-236-071-11	ENCAPSULATED COMPONENT	
FL8401	1-236-071-11	ENCAPSULATED COMPONENT	
FL8550	1-236-071-11	ENCAPSULATED COMPONENT	
FL8551	1-236-071-11	ENCAPSULATED COMPONENT	
FL8552	1-236-071-11	ENCAPSULATED COMPONENT	
		< IC >	
IC8100	8-759-352-94	IC TDA7309D013TR	
IC8101	8-759-085-34	IC TDA2822D	
IC8125	8-759-351-01	IC TEA6422DT	
IC8151	8-752-072-94	IC CXA1875AM-T4	
IC8200	8-759-544-10	IC MSP3410D-QA-B4	
IC8201	8-759-701-36	IC MC3403NS-E20	
IC8202	8-759-908-15	IC TL431CZ	
IC8300	8-759-546-01	IC TDA9320H-N1-518	
IC8400	8-759-546-01	IC TDA9320H-N1-518	
IC8451	8-759-385-76	IC MC14052BDR2	

J

REF. NO.	PART.NO	DESCRIPTION	REMARK
IC8550	8-759-487-47	IC SDA9288X-B121	
IC8601	8-759-544-24	IC LF90CDT	
IC8602	8-759-544-23	IC LF80CDT	
IC8603	8-759-544-22	IC LF50CDT	
IC8604	8-759-544-22	IC LF50CDT	
		< SOCKET >	
J8901	1-774-747-11	JACK BLOCK, PIN	
		< COIL >	
L8150	1-414-757-11	INDUCTOR 100UH	
L8200	1-412-006-42	INDUCTOR CHIP 10UH	
L8201	1-412-064-11	INDUCTOR CHIP 100UH	
L8343	1-410-421-21	INDUCTOR 15UH	(KV-29FX60B)
L8550	1-410-428-11	INDUCTOR 56UH	
		< TRANSISTOR >	
Q8100	8-729-620-06	TRANSISTOR 2SC2412K-T-146-R	
Q8101	8-729-620-06	TRANSISTOR 2SC2412K-T-146-R	
Q8156	8-729-620-06	TRANSISTOR 2SC2412K-T-146-R	
Q8157	8-729-620-06	TRANSISTOR 2SC2412K-T-146-R	
Q8200	8-729-620-06	TRANSISTOR 2SC2412K-T-146-R	
Q8201	8-729-620-06	TRANSISTOR 2SC2412K-T-146-R	
Q8202	8-729-620-06	TRANSISTOR 2SC2412K-T-146-R	
Q8301	8-729-038-96	TRANSISTOR IMZ1A-T109	
Q8303	8-729-620-06	TRANSISTOR 2SC2412K-T-146-R	
Q8304	8-729-620-06	TRANSISTOR 2SC2412K-T-146-R	
Q8305	8-729-620-06	TRANSISTOR 2SC2412K-T-146-R	
Q8306	8-729-620-06	TRANSISTOR 2SC2412K-T-146-R	
Q8307	8-729-620-06	TRANSISTOR 2SC2412K-T-146-R	
Q8308	8-729-038-96	TRANSISTOR IMZ1A-T109	
Q8309	8-729-038-96	TRANSISTOR IMZ1A-T109	
Q8310	8-729-038-96	TRANSISTOR IMZ1A-T109	
Q8311	8-729-620-06	TRANSISTOR 2SC2412K-T-146-R	(KV-29FX60B)
Q8343	8-729-620-06	TRANSISTOR 2SC2412K-T-146-R	(KV-29FX60B)
Q8400	8-729-620-06	TRANSISTOR 2SC2412K-T-146-R	
Q8401	8-729-216-22	TRANSISTOR 2SA1037K-T-146-R	
Q8403	8-729-620-06	TRANSISTOR 2SC2412K-T-146-R	
Q8404	8-729-620-06	TRANSISTOR 2SC2412K-T-146-R	
Q8405	8-729-038-96	TRANSISTOR IMZ1A-T109	
Q8406	8-729-038-96	TRANSISTOR IMZ1A-T109	
Q8407	8-729-038-96	TRANSISTOR IMZ1A-T109	
Q8425	8-729-620-06	TRANSISTOR 2SC2412K-T-146-R	
Q8450	8-729-216-22	TRANSISTOR 2SA1037K-T-146-R	
Q8453	8-729-902-91	TRANSISTOR 2SA1037K	
Q8456	8-729-620-06	TRANSISTOR 2SC2412K-T-146-R	
Q8459	8-729-216-22	TRANSISTOR 2SA1037K-T-146-R	
Q8461	8-729-216-22	TRANSISTOR 2SA1037K-T-146-R	
Q8900	8-729-620-06	TRANSISTOR 2SC2412K-T-146-R	
Q8901	8-729-620-06	TRANSISTOR 2SC2412K-T-146-R	
Q8903	8-729-620-06	TRANSISTOR 2SC2412K-T-146-R	

REF. NO.	PART.NO	DESCRIPTION			REMARK
		< RESISTOR >			
R8100	1-216-025-91	RES,CHIP	100	5%	1/10W
R8101	1-216-025-91	RES,CHIP	100	5%	1/10W
R8102	1-216-295-91	SHORT	0		
R8103	1-216-089-91	RES,CHIP	47K	5%	1/10W
R8104	1-216-089-91	RES,CHIP	47K	5%	1/10W
R8105	1-216-057-00	RES,CHIP	2.2K	5%	1/10W
R8106	1-216-081-00	RES,CHIP	22K	5%	1/10W
R8107	1-216-081-00	RES,CHIP	22K	5%	1/10W
R8108	1-216-057-00	RES,CHIP	2.2K	5%	1/10W
R8109	1-249-389-11	CARBON	4.7	5%	1/4W F
R8110	1-249-389-11	CARBON	4.7	5%	1/4W F
R8111	1-216-033-00	RES,CHIP	220	5%	1/10W
R8112	1-216-033-00	RES,CHIP	220	5%	1/10W
R8115	1-216-029-91	RES,CHIP	150	5%	1/10W
R8116	1-216-029-91	RES,CHIP	150	5%	1/10W
R8117	1-216-029-91	RES,CHIP	150	5%	1/10W
R8118	1-216-029-91	RES,CHIP	150	5%	1/10W
R8125	1-216-295-91	SHORT	0		
R8126	1-216-057-00	RES,CHIP	2.2K	5%	1/10W
R8127	1-216-113-00	RES,CHIP	470K	5%	1/10W
R8128	1-216-049-91	RES,CHIP	1K	5%	1/10W
R8129	1-216-025-91	RES,CHIP	100	5%	1/10W
R8130	1-216-025-91	RES,CHIP	100	5%	1/10W
R8131	1-216-049-91	RES,CHIP	1K	5%	1/10W
R8132	1-216-057-00	RES,CHIP	2.2K	5%	1/10W
R8133	1-216-113-00	RES,CHIP	470K	5%	1/10W
R8165	1-216-295-91	SHORT	0		
R8167	1-216-025-91	RES,CHIP	100	5%	1/10W
R8168	1-216-025-91	RES,CHIP	100	5%	1/10W
R8174	1-216-065-91	RES,CHIP	4.7K	5%	1/10W
R8175	1-216-065-91	RES,CHIP	4.7K	5%	1/10W
R8200	1-216-049-91	RES,CHIP	1K	5%	1/10W
R8201	1-216-295-91	SHORT	0		
R8202	1-216-021-00	RES,CHIP	68	5%	1/10W
R8203	1-216-069-00	RES,CHIP	6.8K	5%	1/10W
R8204	1-216-049-91	RES,CHIP	1K	5%	1/10W
R8205	1-216-069-00	RES,CHIP	6.8K	5%	1/10W
R8206	1-216-049-91	RES,CHIP	1K	5%	1/10W
R8208	1-216-037-00	RES,CHIP	330	5%	1/10W
R8209	1-216-659-11	METAL CHIP	2.2K	0.50%	1/10W
R8210	1-216-025-91	RES,CHIP	100	5%	1/10W
R8211	1-216-295-91	SHORT	0		
R8212	1-216-295-91	SHORT	0		
R8213	1-216-295-91	SHORT	0		
R8214	1-216-295-91	SHORT	0		
R8216	1-216-025-91	RES,CHIP	100	5%	1/10W
R8217	1-216-025-91	RES,CHIP	100	5%	1/10W
R8223	1-216-089-91	RES,CHIP	47K	5%	1/10W
R8224	1-216-089-91	RES,CHIP	47K	5%	1/10W
R8225	1-216-089-91	RES,CHIP	47K	5%	1/10W

REF. NO.	PART.NO	DESCRIPTION			REMARK
R8226	1-216-089-91	RES,CHIP	47K	5%	1/10W
R8227	1-216-089-91	RES,CHIP	47K	5%	1/10W
R8228	1-216-089-91	RES,CHIP	47K	5%	1/10W
R8229	1-216-295-91	SHORT	0		
R8230	1-216-081-00	RES,CHIP	22K	5%	1/10W
R8231	1-216-089-91	RES,CHIP	47K	5%	1/10W
R8232	1-216-089-91	RES,CHIP	47K	5%	1/10W
R8233	1-216-089-91	RES,CHIP	47K	5%	1/10W
R8234	1-216-089-91	RES,CHIP	47K	5%	1/10W
R8235	1-216-089-91	RES,CHIP	47K	5%	1/10W
R8236	1-216-089-91	RES,CHIP	47K	5%	1/10W
R8237	1-216-043-91	RES,CHIP	560	5%	1/10W
R8238	1-216-063-91	RES,CHIP	3.9K	5%	1/10W
R8239	1-216-069-00	RES,CHIP	6.8K	5%	1/10W
R8240	1-216-651-11	METAL CHIP	1K	0.50%	1/10W
R8243	1-216-021-00	RES,CHIP	68	5%	1/10W
R8300	1-216-041-00	RES,CHIP	470	5%	1/10W
R8302	1-216-017-91	RES,CHIP	47	5%	1/10W
R8303	1-216-041-00	RES,CHIP	470	5%	1/10W
R8304	1-216-041-00	RES,CHIP	470	5%	1/10W
R8305	1-216-049-91	RES,CHIP	1K	5%	1/10W (KV-29FX60B)
R8307	1-216-049-91	RES,CHIP	1K	5%	1/10W
R8308	1-216-057-00	RES,CHIP	2.2K	5%	1/10W
R8310	1-216-057-00	RES,CHIP	2.2K	5%	1/10W
R8311	1-216-085-00	RES,CHIP	33K	5%	1/10W
R8312	1-216-077-00	RES,CHIP	15K	5%	1/10W
R8313	1-216-041-00	RES,CHIP	470	5%	1/10W
R8314	1-216-041-00	RES,CHIP	470	5%	1/10W
R8316	1-216-295-91	SHORT	0		
R8317	1-216-025-91	RES,CHIP	100	5%	1/10W
R8318	1-216-025-91	RES,CHIP	100	5%	1/10W
R8319	1-216-295-91	SHORT	0		
R8320	1-216-295-91	SHORT	0		
R8321	1-216-049-91	RES,CHIP	1K	5%	1/10W
R8322	1-216-049-91	RES,CHIP	1K	5%	1/10W
R8323	1-216-097-91	RES,CHIP	100K	5%	1/10W
R8325	1-216-041-00	RES,CHIP	470	5%	1/10W
R8326	1-216-041-00	RES,CHIP	470	5%	1/10W
R8327	1-216-041-00	RES,CHIP	470	5%	1/10W
R8328	1-216-041-00	RES,CHIP	470	5%	1/10W
R8329	1-216-041-00	RES,CHIP	470	5%	1/10W
R8330	1-216-041-00	RES,CHIP	470	5%	1/10W
R8331	1-216-041-00	RES,CHIP	470	5%	1/10W
R8332	1-216-041-00	RES,CHIP	470	5%	1/10W
R8333	1-216-041-00	RES,CHIP	470	5%	1/10W
R8334	1-216-017-91	RES,CHIP	47	5%	1/10W
R8335	1-216-017-91	RES,CHIP	47	5%	1/10W
R8337	1-216-077-00	RES,CHIP	15K	5%	1/10W
R8338	1-216-017-91	RES,CHIP	47	5%	1/10W
R8339	1-216-017-91	RES,CHIP	47	5%	1/10W
R8340	1-216-049-91	RES,CHIP	1K	5%	1/10W
R8343	1-216-045-00	RES,CHIP	680	5%	1/10W (KV-29FX60B)
R8344	1-216-033-00	RES,CHIP	220	5%	1/10W (KV-29FX60B)
R8345	1-216-033-00	RES,CHIP	220	5%	1/10W (KV-29FX60B)
R8346	1-216-295-91	SHORT	0		(KV-29FX60A/29FX60D/ 29FX60E/29FX60U)
R8347	1-216-025-91	RES,CHIP	100	5%	1/10W (KV-29FX60B)
R8348	1-216-295-91	SHORT	0		(KV-29FX60B)
R8349	1-216-121-91	RES,CHIP	1M	5%	1/10W
R8350	1-216-073-00	RES,CHIP	10K	5%	1/10W
R8351	1-216-073-00	RES,CHIP	10K	5%	1/10W
R8400	1-216-041-00	RES,CHIP	470	5%	1/10W
R8402	1-216-295-91	SHORT	0		
R8403	1-216-041-00	RES,CHIP	470	5%	1/10W
R8404	1-216-295-91	SHORT	0		
R8405	1-216-025-91	RES,CHIP	100	5%	1/10W
R8406	1-216-025-91	RES,CHIP	100	5%	1/10W
R8407	1-216-295-91	SHORT	0		
R8408	1-216-295-91	SHORT	0		
R8409	1-216-057-00	RES,CHIP	2.2K	5%	1/10W
R8410	1-216-049-91	RES,CHIP	1K	5%	1/10W
R8411	1-216-097-91	RES,CHIP	100K	5%	1/10W
R8412	1-216-041-00	RES,CHIP	470	5%	1/10W
R8413	1-216-041-00	RES,CHIP	470	5%	1/10W
R8414	1-216-041-00	RES,CHIP	470	5%	1/10W
R8415	1-216-041-00	RES,CHIP	470	5%	1/10W
R8416	1-216-041-00	RES,CHIP	470	5%	1/10W
R8417	1-216-041-00	RES,CHIP	470	5%	1/10W
R8418	1-216-041-00	RES,CHIP	470	5%	1/10W
R8419	1-216-041-00	RES,CHIP	470	5%	1/10W
R8420	1-216-041-00	RES,CHIP	470	5%	1/10W
R8421	1-216-049-91	RES,CHIP	1K	5%	1/10W
R8422	1-216-017-91	RES,CHIP	47	5%	1/10W
R8423	1-216-017-91	RES,CHIP	47	5%	1/10W
R8424	1-216-025-91	RES,CHIP	100	5%	1/10W
R8425	1-216-077-00	RES,CHIP	15K	5%	1/10W
R8426	1-216-017-91	RES,CHIP	47	5%	1/10W
R8427	1-216-017-91	RES,CHIP	47	5%	1/10W
R8428	1-216-017-91	RES,CHIP	47	5%	1/10W
R8429	1-216-041-00	RES,CHIP	470	5%	1/10W
R8430	1-216-041-00	RES,CHIP	470	5%	1/10W
R8431	1-216-017-91	RES,CHIP	47	5%	1/10W
R8432	1-216-121-91	RES,CHIP	1M	5%	1/10W (KV-29FX60B)
R8433	1-216-073-00	RES,CHIP	10K	5%	1/10W
R8434	1-216-073-00	RES,CHIP	10K	5%	1/10W
R8450	1-216-089-91	RES,CHIP	47K	5%	1/10W

J

REF. NO.	PART.NO	DESCRIPTION			REMARK
R8451	1-216-073-00	RES,CHIP	10K	5%	1/10W
R8453	1-216-089-91	RES,CHIP	47K	5%	1/10W
R8454	1-216-073-00	RES,CHIP	10K	5%	1/10W
R8455	1-216-057-00	RES,CHIP	2.2K	5%	1/10W
R8460	1-216-057-00	RES,CHIP	2.2K	5%	1/10W
R8462	1-216-073-00	RES,CHIP	10K	5%	1/10W
R8467	1-216-089-91	RES,CHIP	47K	5%	1/10W
R8468	1-216-073-00	RES,CHIP	10K	5%	1/10W
R8469	1-216-033-00	RES,CHIP	220	5%	1/10W
R8470	1-216-022-00	RES,CHIP	75	5%	1/10W
R8472	1-216-089-91	RES,CHIP	47K	5%	1/10W
R8473	1-216-073-00	RES,CHIP	10K	5%	1/10W
R8474	1-216-033-00	RES,CHIP	220	5%	1/10W
R8475	1-216-022-00	RES,CHIP	75	5%	1/10W
R8550	1-216-295-91	SHORT	0		
R8551	1-216-043-91	RES,CHIP	560	5%	1/10W
R8552	1-216-043-91	RES,CHIP	560	5%	1/10W
R8553	1-216-043-91	RES,CHIP	560	5%	1/10W
R8554	1-216-037-00	RES,CHIP	330	5%	1/10W
R8555	1-216-069-00	RES,CHIP	6.8K	5%	1/10W
R8556	1-216-025-91	RES,CHIP	100	5%	1/10W
R8557	1-216-025-91	RES,CHIP	100	5%	1/10W
R8558	1-216-049-91	RES,CHIP	1K	5%	1/10W
R8559	1-216-049-91	RES,CHIP	1K	5%	1/10W
R8560	1-216-047-91	RES,CHIP	820	5%	1/10W
R8561	1-216-045-00	RES,CHIP	680	5%	1/10W
R8562	1-216-049-91	RES,CHIP	1K	5%	1/10W
R8563	1-216-051-00	RES,CHIP	1.2K	5%	1/10W
R8564	1-216-049-91	RES,CHIP	1K	5%	1/10W
R8565	1-216-049-91	RES,CHIP	1K	5%	1/10W
R8566	1-216-047-91	RES,CHIP	820	5%	1/10W
R8900	1-216-039-00	RES,CHIP	390	5%	1/10W
R8901	1-216-049-91	RES,CHIP	1K	5%	1/10W
R8902	1-216-039-00	RES,CHIP	390	5%	1/10W
R8903	1-216-089-91	RES,CHIP	47K	5%	1/10W
R8904	1-216-089-91	RES,CHIP	47K	5%	1/10W
R8905	1-216-113-00	RES,CHIP	470K	5%	1/10W
R8906	1-216-039-00	RES,CHIP	390	5%	1/10W
R8907	1-216-057-00	RES,CHIP	2.2K	5%	1/10W
R8908	1-216-039-00	RES,CHIP	390	5%	1/10W
R8909	1-216-049-91	RES,CHIP	1K	5%	1/10W
R8911	1-216-063-91	RES,CHIP	3.9K	5%	1/10W
R8913	1-216-022-00	RES,CHIP	75	5%	1/10W
R8914	1-216-071-00	RES,CHIP	8.2K	5%	1/10W
R8915	1-216-022-91	RES,CHIP	75	5%	1/10W
R8916	1-216-033-00	RES,CHIP	220	5%	1/10W
R8917	1-216-033-00	RES,CHIP	220	5%	1/10W
R8918	1-216-113-00	RES,CHIP	470K	5%	1/10W
R8919	1-216-057-00	RES,CHIP	2.2K	5%	1/10W
R8922	1-216-022-00	RES,CHIP	75	5%	1/10W
R8923	1-216-022-00	RES,CHIP	75	5%	1/10W

REF. NO.	PART.NO	DESCRIPTION			REMARK
R8924	1-216-022-00	RES,CHIP	75	5%	1/10W
R8925	1-216-022-00	RES,CHIP	75	5%	1/10W
R8926	1-216-033-00	RES,CHIP	220	5%	1/10W
R8927	1-216-033-00	RES,CHIP	220	5%	1/10W
R8928	1-216-033-00	RES,CHIP	220	5%	1/10W
R8929	1-216-039-00	RES,CHIP	390	5%	1/10W
R8930	1-216-049-91	RES,CHIP	1K	5%	1/10W
R8931	1-216-039-00	RES,CHIP	390	5%	1/10W
R8932	1-216-049-91	RES,CHIP	1K	5%	1/10W
R8933	1-216-089-91	RES,CHIP	47K	5%	1/10W
R8934	1-216-089-91	RES,CHIP	47K	5%	1/10W
R8935	1-216-113-00	RES,CHIP	470K	5%	1/10W
R8936	1-216-113-00	RES,CHIP	470K	5%	1/10W
R8937	1-216-039-00	RES,CHIP	390	5%	1/10W
R8938	1-216-057-00	RES,CHIP	2.2K	5%	1/10W
R8939	1-216-039-00	RES,CHIP	390	5%	1/10W
R8940	1-216-057-00	RES,CHIP	2.2K	5%	1/10W
R8941	1-216-063-91	RES,CHIP	3.9K	5%	1/10W
R8942	1-216-009-00	RES,CHIP	22	5%	1/10W
R8943	1-216-022-00	RES,CHIP	75	5%	1/10W
R8944	1-216-071-00	RES,CHIP	8.2K	5%	1/10W
R8945	1-216-022-00	RES,CHIP	75	5%	1/10W
R8946	1-216-033-00	RES,CHIP	220	5%	1/10W
R8947	1-216-039-00	RES,CHIP	390	5%	1/10W
R8948	1-216-049-91	RES,CHIP	1K	5%	1/10W
R8949	1-216-022-00	RES,CHIP	75	5%	1/10W
R8950	1-216-089-91	RES,CHIP	47K	5%	1/10W
R8951	1-216-033-00	RES,CHIP	220	5%	1/10W
R8952	1-216-113-00	RES,CHIP	470K	5%	1/10W
R8953	1-216-039-00	RES,CHIP	390	5%	1/10W
R8954	1-216-057-00	RES,CHIP	2.2K	5%	1/10W
R8955	1-216-039-00	RES,CHIP	390	5%	1/10W
R8956	1-216-049-91	RES,CHIP	1K	5%	1/10W
R8957	1-216-049-91	RES,CHIP	1K	5%	1/10W
R8958	1-216-089-91	RES,CHIP	47K	5%	1/10W
R8959	1-216-022-00	RES,CHIP	75	5%	1/10W
R8960	1-216-033-00	RES,CHIP	220	5%	1/10W
R8961	1-216-022-00	RES,CHIP	75	5%	1/10W
R8963	1-216-113-00	RES,CHIP	470K	5%	1/10W
R8964	1-216-039-00	RES,CHIP	390	5%	1/10W
R8965	1-216-057-00	RES,CHIP	2.2K	5%	1/10W
R8968	1-216-022-00	RES,CHIP	75	5%	1/10W
R8969	1-216-033-00	RES,CHIP	220	5%	1/10W
R8977	1-216-037-00	RES,CHIP	330	5%	1/10W
R8978	1-216-037-00	RES,CHIP	330	5%	1/10W
R8979	1-216-045-00	RES,CHIP	680	5%	1/10W
R8980	1-216-045-00	RES,CHIP	680	5%	1/10W
R8981	1-216-085-00	RES,CHIP	33K	5%	1/10W
R8982	1-216-057-00	RES,CHIP	2.2K	5%	1/10W
R8983	1-216-077-00	RES,CHIP	15K	5%	1/10W
R8990	1-216-057-00	RES,CHIP	2.2K	5%	1/10W

The components identified by shading and marked ⚠ are critical for safety
Replace only with the part number specified.

J

REF. NO.	PART.NO	DESCRIPTION	REMARK
R8991	1-216-097-91	RES,CHIP 100K 5% 1/10W	
R8992	1-216-057-00	RES,CHIP 2.2K 5% 1/10W	
R8993	1-216-057-00	RES,CHIP 2.2K 5% 1/10W	
		< CRYSTAL >	
X8200	1-781-148-21	VIBRATOR, CRYSTAL	
X8300	1-567-504-11	OSCILLATOR, CRYSTAL	
X8301	1-567-505-11	OSCILLATOR, CRYSTAL	
X8400	1-567-504-11	OSCILLATOR, CRYSTAL	
X8401	1-567-505-11	OSCILLATOR, CRYSTAL	
X8550	1-760-551-21	VIBRATOR, CERAMIC	

****

REF. NO.	PART.NO	DESCRIPTION	REMARK
		< MISCELLANEOUS >	
⚠	1-416-654-11	COIL, DEMAGNETIC	
	4-425-032-00	MAGNET, DISK; 10MM	
	1-452-094-00	MAGNET, ROTATABLE DISK; 15MM	
⚠	1-453-272-11	TRANSFORMER ASSY, FLYBACK	(NX-4512/U2B4)
	1-529-153-11	SPEAKER (4.8X20CM)	
	1-529-144-11	SPEAKER (13CM)	
	1-452-896-11	COIL, NA ROTATION (RT200)	
⚠	1-571-433-21	SWITCH, PUSH (AC POWER)	
⚠	1-574-062-61	CORD, POWER (WITH CONNECTOR)	(KV-29FX60A/29FX60B/29FX60D/29FX60E)
⚠	1-590-762-21	CORD, POWER (WITH UK PLUG) (KV-29FX60U)	
	1-693-338-11	TUNER/VIF (AEP)	(KV-29FX60A/29FX60D/29FX60E)
	1-693-340-11	TUNER/VIF (FR) (KV-29FX60B)	
	1-693-339-11	TUNER/VIF (UK) (KV-29FX60U)	
⚠	8-735-053-05	PICTURE TUBE (M68LNH060X)	
⚠	8-451-504-11	DEFLECTION YOKE (Y29RSC-M)	
⚠	8-453-011-11	NECK ASSY, NA299-M	
⚠	1-251-317-31	CAP ASSY, HIGH VOLTAGE	

****

ACCESSORIES AND PACKAGING MATERIALS
****

	4-204-548-41	MANUAL, INSTRUCTION (KV-29FX60A) (ITALIAN)
	4-204-548-51	MANUAL, INSTRUCTION (KV-29FX60B) (FRENCH/GERMAN/ITALIAN/DUTCH)
	4-204-548-11	MANUAL, INSTRUCTION (KV-29FX60D) (GREEK/ENGLISH/GERMAN/TURKISH)
	4-204-548-71	MANUAL, INSTRUCTION (KV-29FX60E) (SPANISH)
	4-204-548-81	MANUAL, INSTRUCTION (KV-29FX60E) (PORTUGUESE/FINNISH/DANISH/NORWEGIAN/SWEDISH)
	4-204-548-61	MANUAL, INSTRUCTION (KV-29FX60U) (ENGLISH)
	*4-042-476-01	BAG, PROTECTION
	*4-204-475-01	INDIVIDUAL CARTON
	*4-204-553-01	CUSHION (UPPER) (ASSY)
	*4-204-556-01	CUSHION (LOWER) (ASSY)

REMOTE COMMANDER
****

	1-418-047-11	REMOTE COMMANDER (RM891)

English
98IP7170-1
Printed in U.K.
© 1998.9

Sony Corporation
Sony UK
Service Promotions Dept.

9-974-974-01